Model 910

SWEEPING MICROWAVE

SYNTHESIZED SIGNAL GENERATOR

MP MASTER
MA32033

OPERATION & MAINTENANCE MANUAL

Model 910

SWEEPING MICROWAVE

SYNTHESIZED SIGNAL GENERATOR

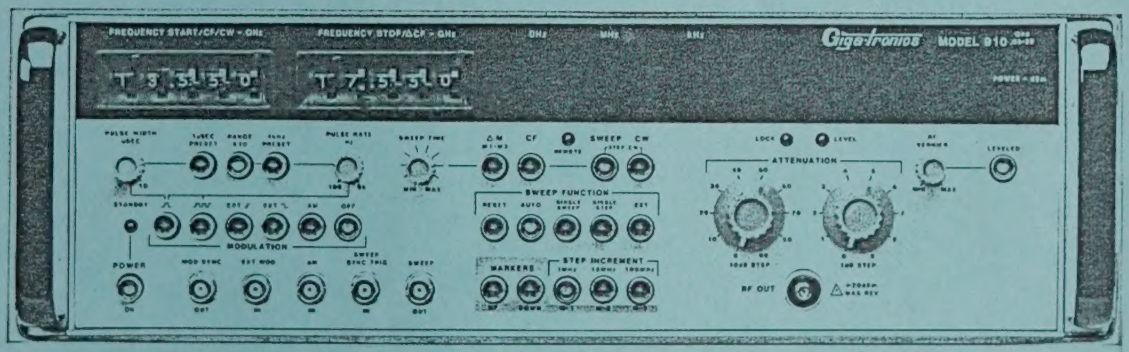

NOTE: Some diagrams and parts lists, particularly those pertinent to the analog sweep circuits, are not yet available for publication, owing to recent revisions in these circuits.

The part number of the Model 910 Shipping Assembly is 106DA01100.

The part number of the manual is 106AM01900. Print date: January, 1987.

WARRANTY

All Giga-tronics instruments are warranted against defective materials and workmanship for one year from date of shipment. Giga-tronics will at its option repair or replace products that are proven defective during the warranty period.

This warranty DOES NOT cover damage resulting from improper use, nor workmanship other than Giga-tronics service.

There is no implied warranty of fitness for a particular purpose, nor is Giga-tronics liable for any consequential damages.

Specification and price change privelages are reserved by Giga-tronics.

NOTES REGARDING THE TEXT

This manual employs the convention of indicating exponents by a capital 'E' and indicating multiplication by the symbol '*' (for example, 10E4 = 10000, and 6 * 10E-3 = .006).

Block diagram symbols used in the manual are defined at the beginning of Section Three.

OPERATION & MAINTENANCE MANUAL

Model 910

SWEEPING MICROWAVE

SYNTHESIZED SIGNAL GENERATOR

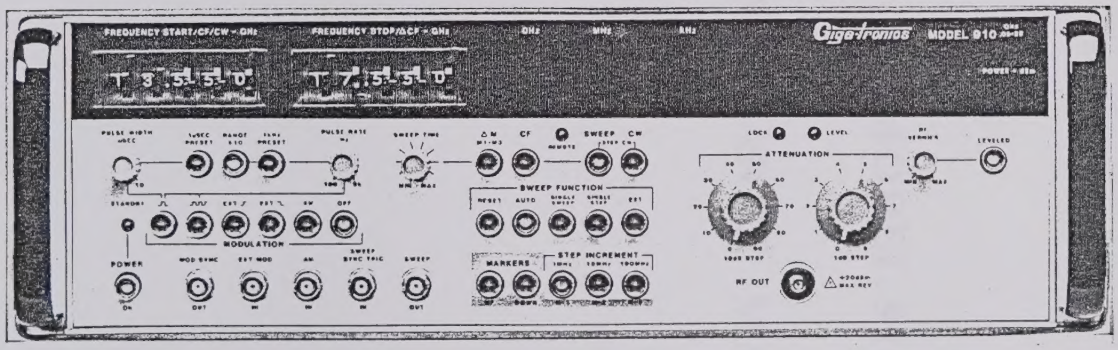

NOTE: Some diagrams and parts lists, particularly those pertinent to the analog sweep circuits, are not yet available for publication, owing to recent revisions in these circuits.

The part number of the Model 910 Shipping Assembly is 106DA01100.

The part number of the manual is 106AM01900. Print date: January, 1987.

Giga-tronics

MODEL 910

OPERATION & MAINTENANCE MANUAL

Digitized by the Internet Archive
in 2025

https://archive.org/details/manualsplus_10608

CONTENTS

Preface . . . . . General Information

Section One . . . . . Operating Information

Section Two . . . . . Operating Performance

Section Three . . . . . Theory of Operation

Section Four. . . . . Calibration and Testing

Section Five. . . . . Maintenance

Section Six . . . . . Parts Lists

Section Seven . . . . . Diagrams

Section Eight . . . . . Standard Options

Section Nine. . . . . Special Configurations

INTRODUCTION

Purpose and Function

The purpose and function of Series 910 instruments is to synthesize a range of microwave frequencies (fixed or swept) at a variety of power levels and in a variety of modulation modes.

Capabilities

The Series 910 is capable of generating output signals over a frequency range of 50 MHz to 26 GHz, with output levels over a range of +5 dBm to -110 dBm (the ranges of particular instruments are determined by the configuration purchased). The RF output can be swept through a range of frequencies, and can be internally or externally modulated in pulse and AM modes.

Performance Characteristics

The Series 910 generates its output signals under manual control or under remote computer control via the IEEE-488 General Purpose Interface Bus. Complete performance specifications are given in Section 2 of this manual.

Weight and Dimensions

The Series 910 has a weight of 65 lbs (nominal); the dimensions are 5.25 inches (height) by 16.75 inches (width) by 24 inches (depth).

Power Requirements

100/120/220/240 VAC $\pm$ 10%, 50-400 Hz, 200 W max.

Environmental Requirements

The Series 910 is type tested to MIL-T-28800C, Type III, Class 5, Style E, for Navy shipboard, submarine, and shore applications, except as follows:

Non-operating temperature range is -40°C to +70°C.
Relative humidity is limited to 95% noncondensating.
Altitude and EMI requirements are not specified.
Warm-up time is 20 minutes.

Items Furnished

In addition to options and/or accessories specifically ordered, items furnished with the instrument are:

1 ea. - Operation and Maintenance Manual, Part No. 106DA01100
1 ea. - 6 ft. power cord
3 ea. - PC Extender Board
1 ea. - PC Card Extractor
1 set. - Test Data

Items Required

An IEEE-488 interface cable is needed for remote control operation. Appropriate RF output cabling (made to fit the female type SMA output connector) can be ordered in the form of Accessory A001 (Cable Kit).

Tools and Test Equipment

No special tools are required to operate the Series 910; signal sources used for external modulation should meet the parameters set out in Section 2 of this manual. Test equipment required for calibration or performance verification is described in Section 4.

Storage

Storage of the instrument should be limited to an environment that does not exceed the temperature range of -40°C to +70°C.

Cooling

A cooling fan is installed in the instrument. The cooling air intake and exhaust are both located on the instrument's rear panel. Care must be taken to avoid obstructing the flow of air into and out of the instrument.

Cleaning

The air inlet screen should be cleaned whenever a significant amount of dirt or dust has accumulated. Whenever the instrument covers are removed, the interior should be blown out with low velocity dry air.

Installation and Preparation for Use

The instrument is shipped in an operational condition and no special installation procedures are required. A warm-up time of 20 minutes is recommended.

Receiving Inspection

When the instrument is received, check the carton for evidence of damage. If damage is found, notify the carrier immediately, and open the carton only in the carrier's presence.

Use care in removing the instrument from the carton and check immediately for evidence of shipping damage: loose or broken control knobs, bent or broken connectors, dents or scratches on the panels, etc.

Each Giga-tronics instrument must pass rigorous inspections and tests prior to shipment. Upon receipt, it should immediately be subjected to a performance check to insure that its operation has not been impaired during shipment. The performance verification procedure is described in Section 4 of this manual.

Preparation for Reshipment

To protect the instrument during reshipment, use the best packaging

available. If possible, re-use the original shipping container. If this is not possible, a strong carton (350 lbs/sq. in. bursting strength) or a wooden box should be used.

Wrap the instrument in heavy paper or plastic before placing it in the shipping container. Completely fill the areas on all sides of the instrument with packaging material, taking extra precautions to protect the front and rear panels.

Seal the package with strong tape or metal bands. Mark the outside of the package "FRAGILE -- DELICATE INSTRUMENT".

If corresponding with the factory or local Giga-tronics sales office regarding reshipment, please reference the full model number and serial number. If the instrument is being reshipped for repair, be sure to enclose all available pertinent data regarding the problem that has been found.

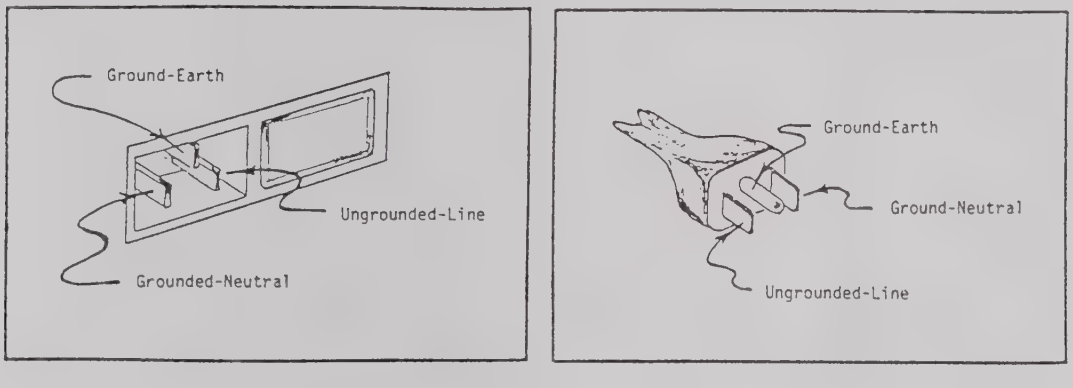

Figure 0.1: Power Line Connection

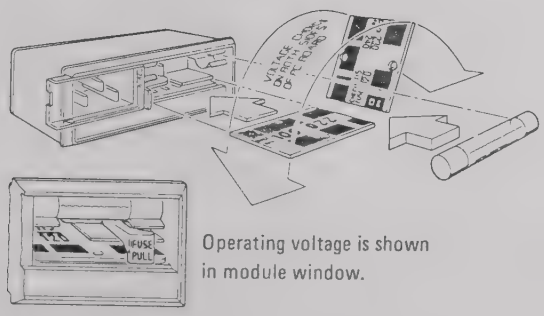

Figure 0.2: Voltage Selector/Fuse Holder

Safety Precautions

C A U T I O N

The instrument can be damaged if operated with the line voltage selector set inappropriately for the applied line voltage. Before operating the instrument, make sure that the instrument power requirements are compatible with the power source to be used. The instrument has been designed for international use over a broad range of voltages: 100, 120, 220, or 240, ± 10%, at 50-400 Hz. The Series 910 uses an internationally approved connector that includes voltage selection, fuse and filter for RFI protection.

W A R N I N G

The instrument has a 3-wire power cord with a 3-terminal polarized plug for connection to the power source and safety-ground. The ground or safety ground is connected directly to the chassis; therefore, if a 3-to-2 wire adapter is used, be sure to connect the ground lead from the adapter to earth ground. Failure to do this could cause the instrument to float above earth ground, posing a shock hazard.

Voltage Selection

To select the correct operating line voltage, proceed as follows:

Open the cover door and rotate the fuse-pull to the left; remove fuse.

Select the operating voltage by orienting the PC board in order to position the desired voltage label on the top left side. Push the board firmly into the module slot.

Rotate the fuse-pull back into the normal position and reinsert the fuse into the holder, using care to select the correct fuse value.

Fuse Selection

When the instrument is shipped from the factory, it is set for a particular power line voltage (normally 120V for domestic shipping destinations). The power line fuse for this setting is a 2.5A 3AG Slo-Blo. If the instrument is set to operate on a 240V power line, the fuse must be changed to a 1.25A 3AG Slo-Blo.

SECTION ONE

OPERATING INFORMATION

1. FRONT PANEL DESCRIPTION

The major controls and connectors for Series 910 instruments are located on the front panel. Figure 1.1 shows the front panel's various functional sections; a brief description of the controls and connectors within each section follows.

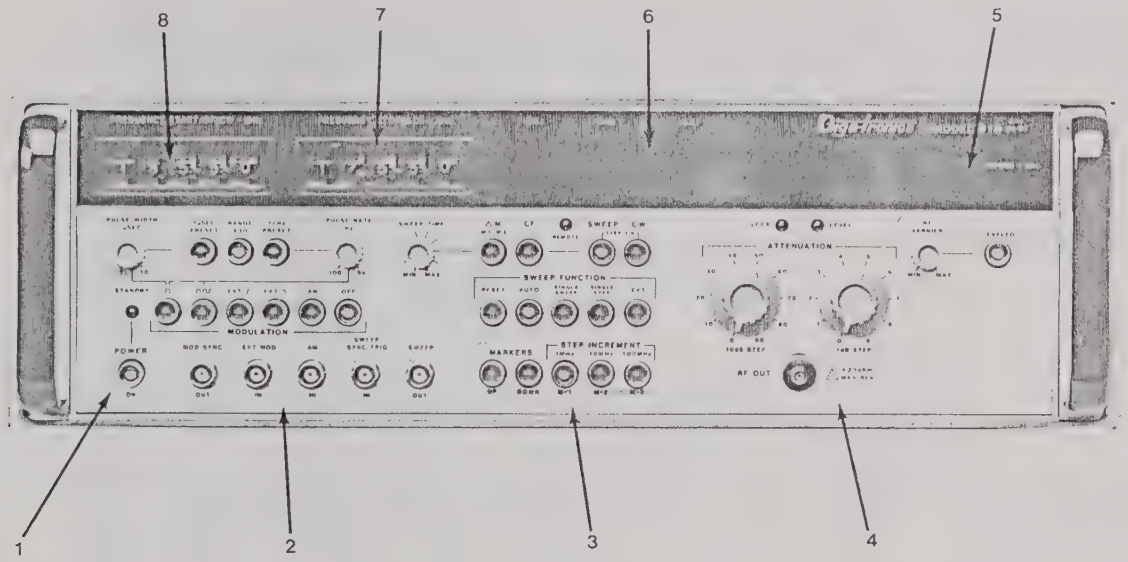

Figure 1.1

1. Line Power
2. Modulation Section
3. Generate/Sweep Section
4. RF Output Section
5. RF Power Readout
6. Frequency Readout
7. Frequency Stop Setting
8. Frequency Start Setting

LINE POWER SECTION

STANDBY (indicator) -- This LED lights to indicate that the instrument is connected to the AC power source and is in standby condition.

POWER (pushbutton) -- When this pushbutton is depressed, all of the instrument's DC power supplies are activated.

MODULATION SECTION

MODULATION (six pushbuttons) -- This group of pushbuttons is used to select different types of modulation.

PULSE (⎍⎍) -- Provides pulse modulation with a variable rate from 100 Hz to 50 kHz, and a variable width from 0.1 microsecond to 10 microseconds.

SQUARE WAVE (⎍⎍⎍) -- Provides square wave modulation with a variable rate from 100 Hz to 50 kHz.

EXTERNAL HIGH TRIGGER (EXT⎍) -- Allows external pulse modulation at a repetition rate from 10 Hz to 1 MHz, with a pulse width variable from 0.1 microsecond to 10 microseconds. The beginning of the RF pulse is triggered on a TTL high.

EXTERNAL LOW TRIGGER (EXT⎍) -- Allows external pulse modulation as described above, except that the beginning of the RF pulse is triggered by a TTL low.

AM -- Allows amplitude modulation at depths between 0 and 20 dB.

OFF -- All modulation off.

PULSE WIDTH uSEC (knob) -- This control provides variable pulse width from 0.1 microsecond to 10 microseconds.

1 uSEC PRESET (pushbutton) -- Presets modulation pulse width to 1 microsecond.

RANGE X10 (pushbutton) -- Increases the variable modulation rep rate (see PULSE RATE Hz below) by a factor of 10.

1 kHz PRESET (pushbutton) -- Presets the modulation rep rate to 1 kHz.

PULSE RATE Hz (knob) -- This control provides variable rep rate for either pulse or square wave modulation from 100 Hz to 5 kHz (1 kHz to 50 kHz when RANGE X10 pushbutton is pressed).

MOD SYNC OUT (BNC connector) -- Provides a sample of the modulation waveform at TTL levels.

EXT MOD IN (BNC connector) -- Accepts a modulation input waveform for use in either mode of externally triggered modulation.

AM IN (BNC connector) -- Accepts an external modulation signal for use in amplitude modulation.

GENERATE/SWEEP SECTION

DELTA M, M1-M3 (pushbutton) -- Causes the instrument to sweep between the first and third marker frequencies.

CF (pushbutton) -- Causes the instrument to sweep between two frequencies defined as: the center frequency minus the 'delta CF' offset frequency, and the center frequency plus the offset frequency.

SWEEP (pushbutton) -- Causes the instrument to sweep rapidly between the start and stop frequencies.

CW (pushbutton) -- Generates a fixed output frequency that is phase locked to the RF reference.

> "STEP CW" -- This mode is entered by pressing the SWEEP and CW pushbuttons simultaneously. The instrument generates a series of fixed frequencies, acquiring phase lock at each increment before proceeding to the next. The STEP CW mode may be thought of as digital sweep, as opposed to the high speed, quasi-analog SWEEP mode. The sweep functions discussed below are equally applicable to SWEEP and STEP CW modes.

SWEEP FUNCTION (five pushbutton) -- This group of pushbuttons is used to select different types of sweep triggering.

RESET -- Resets the instrument to the start frequency.

AUTO -- Activates a recycling sweep process between the specified frequency limits.

SINGLE SWEEP -- Activates one full sweep between the specified limits.

SINGLE STEP -- Advances the output frequency by one increment (STEP CW mode only).

EXT -- Causes the instrument to initiate a sweep or sweep increment in response only to an external trigger (received at the 'SWEEP SYNC TRIG IN' connector) rather than to a pushbutton; the external trigger activates a single sweep or a single step, depending on which mode was last activated.

MARKERS (two pushbuttons) -- The "UP" and "DOWN" marker buttons are used to position the sweep markers by increasing or decreasing the selected frequency of each.

STEP INCREMENT (three pushbuttons) -- The "1 MHz", "10 MHz" and "100 MHz" increment buttons are used to select the size of the steps in "STEP CW" mode. They are also used to specify the first, second or third marker when positioning the sweep markers.

SWEEP TIME (10-position switch) -- Provides 10 settings to vary the speed of a sweep.

SWEEP SYNC TRIG (BNC connector) -- Accepts an external trigger (TTL low) to activate a single sweep or a single step, depending on which mode was last activated (single step is applicable only in the STEP CW mode).

SWEEP OUT (BNC connector) -- Provides a 0 to 10 volt stepped ramp output proportional to progress between the sweep limits; active in both SWEEP and STEP CW modes.

RF OUTPUT SECTION

ATTENUATION (two 10-position switches) -- These switches are used to select attenuation in 10 dB increments (10 dB STEP) and in 1 dB increments (1 dB STEP).

RF OUT (SMA connector) -- Provides the RF output over the entire frequency range of the instrument.

LOCK (indicator) -- This LED lights to indicate that the RF output is phase locked to the internal or external master reference.

LEVEL (indicator) -- This LED lights to indicate that the RF output is leveled; that is, the drive current to the leveling attenuator circuit is between minimum and maximum. When the level requested by the operator exceeds the operating range of the leveling attenuator, this indicator is extinguished and output power cannot be presumed to match the requested level.

RF VERNIER (knob) -- This control, which is functional only when the LEVELED pushbutton is released, provides a vernier adjustment of attenuation over a range of approximately 10 dB. Maximum output power can be achieved by setting this control to 'max' and setting the 10 dB and 1 dB attenuation steps to zero.

LEVELED (pushbutton) -- Causes the output power to be referenced to 0 dBm, so that with attenuation set to zero, the instrument maintains an RF output of 0 dBm $\pm$ 1 dB from 50 MHz to 18 GHz and $\pm$ 2 dB from 18 GHz to 26 GHz.

READOUTS AND FREQUENCY SETTINGS

POWER READOUT (fluorescent display) -- This 3-digit display indicates output power, as measured by the internal leveling system.

FREQUENCY READOUT (fluorescent display) -- This 9-digit display indicates the output frequency in both CW and STEP CW modes. It is also used as an indicator when setting the center frequency or the frequency of markers and offsets in SWEEP mode. The readout is also used to display error messages to the operator.

FREQUENCY START (thumbwheel switch) -- This 5-digit switch is used to set the fixed output frequency in CW mode, as well as the center or start frequency in an analog or digital sweep.

FREQUENCY STOP (thumbwheel switch) -- This 5-digit switch is used to set the stop or offset frequency in an analog or digital sweep.

II. REAR PANEL DESCRIPTION

The rear panel contains the input and output connections used for interfacing the instrument with auxiliary devices. Figure 1.2 shows the various sections of the rear panel.

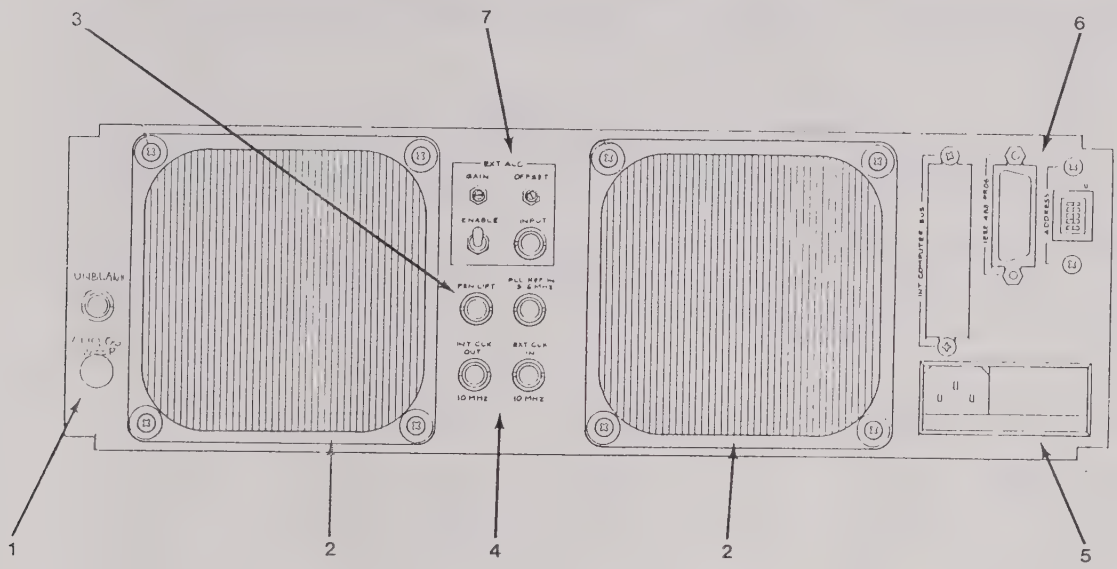

Figure 1.2

1. Sweep Output Section
2. Air Intake and Exhaust
3. Pen Lift
4. Master Reference Section
5. Line Power and Fuse Section
6. Interface Section
7. External ALC section

SWEEP OUTPUT SECTION

ANALOG SWEEP (BNC connector) -- Provides a voltage ramp output during an analog sweep that is directly proportional to output frequency; may be used to control the horizontal position of an oscilloscope raster.

UNBLANK/MARKERS (BNC connector) -- Provides pulses coincident with the marker frequencies during an analog sweep; may be used to modulate the Z-axis input of an oscilloscope.

PEN LIFT (BNC connector) -- Provides a TTL low during retrace in either analog or digital sweep modes; may be used to control a recorder pen or other data recording device.

MASTER REFERENCE SECTION

INT CLK OUT, 10 MHz (BNC connector) -- Provides a sample of the 10 MHz internal reference frequency, at 2 Vpp into 50 ohms.

EXT CLK IN, 10 MHz (BNC connector) -- Accepts an external 10 MHz reference input at 1 Vpp, which is automatically substituted for the internal reference.

PLL REF IN, 5 MHz (BNC connector) -- Accepts an external 5 MHz signal at 1 Vpp, which is automatically substituted for the reference frequency of the Reference Phase Lock Loop circuit; varying this input between 5 and 6 MHz causes a one for one change in the frequency of the RF output.

LINE POWER AND FUSE SECTION

POWER INPUT (AC plug) -- A 3-terminal polarized connector with safety ground wired to the chassis.

LINE SELECTION (PC board) -- The card can be oriented four ways to select four different line voltages: 100, 120, 220 and 240 volts.

FUSE HOLDER -- Retains the power fuse, which should be 2.5A 3AG Slo-Blo for 100/120 volt operation and 1.25A 3AG Slo-Blo for 220/240 volt operation.

INTERFACE SECTION

REMOTE (multiple-pin connector) -- Provides an interface connection between the Model 910 and other equipment; the standard interface is the GPIB IEEE-488-1978, which uses a 24-pin connector.

ADDRESS (5-place DIP switch) -- Used to set the address of the instrument as a 5-bit binary number

EXTERNAL ALC SECTION

ENABLE (switch) -- When the switch is in the enable position, the leveling system is programmed to ignore the internal detectors and use instead the input signal from an external detector.

INPUT (BNC connector) -- Accepts an input signal from an external detector.

GAIN (potentiometer) -- Screwdriver adjustment used to calibrate the instrument's leveling system to match the slope of an external detector's transfer curve.

OFFSET (potentiometer) -- Screwdriver adjustment used to calibrate the instrument's leveling system to match the intercept point of an external detector's transfer curve.

III. FRONT PANEL OPERATION

The following part of section one provides step by step operating procedures for common functional setups.

The Model 910 performs two basic functions: (1) it generates fixed frequencies between 50 MHz and 26.5 GHz, limited by the frequency range of the particular instrument, and (2) it sweeps between any two frequencies within that range. The refinements of these basic functions include control of modulation, power level and sweep rate.

ERROR MESSAGES

The instrument's computer uses the frequency readout to display error messages to the operator when certain controls have been incorrectly set. NOTE: an "invalid mode" message often means that none of the possible modes has been selected.

Error 00 -- Invalid generate mode.

Error 01 -- Invalid frequency (out of range).

Error 02 -- Invalid modulation mode.

Error 03 -- Invalid locked-sweep step size.

Error 04 -- Invalid locked-sweep function.

Error 05 -- Frequency start must be less than frequency stop.

Error 06 -- Amplitude, scan, and pulse modulation must be off when using external ALC.

Error 07 -- No cable calibration data is in memory (instruments with option 09 only).

Error 08 -- Amplitude, scan, and pulse modulation must be off during delta-P mode (instruments with option 09 only).

Error 09 -- Not used by Model 910.

Error 10 -- Cable calibration cannot be used simultaneously with external ALC (instruments with option 09 only).

Error 11 -- 10 dB step attenuator must be set to 0 dB during cable calibration (instruments with option 09 and manual attenuator only).

Error 12 -- Requested level for cable calibration is out of the range of the control system (instruments with option 09 only).

Error 13 -- 10 dB step attenuator must be set to 0 when using external ALC (instruments with manual attenuator only).

Error 14 -- IEEE-488 interface address of 31 (all ones) is invalid.

Error 15 -- Sweeping across multiplier bands is not permitted.

Error 16 -- Amplitude, scan, and pulse modulation must be off during frequency multiplication.

Error 17 -- Not applicable to Model 910.

Error 18 -- External ALC must be off during frequency multiplication.

Error 19 -- Frequency modulation must be off during sweep.

Error 20 -- Invalid delta value in 'CF' sweep mode.

Error 21 -- All three marker buttons must not be pressed simultaneously.

ADDITIONAL DISPLAY SYMBOLS

The rightmost digit of the frequency display is used as an indicator of certain operating modes.

'c' -- The lower case 'c' indicates the instrument is in cable calibration mode (instruments with option 09 only).

'E' -- The upper case 'E' indicates the instrument is in external ALC mode.

'd' -- The lower case 'd' indicates the instrument is in frequency doubler mode; this mode applies only to instruments with option 14 (frequency extender control bus).

't' -- The lower case 't' indicates the instrument is in frequency tripler mode; this mode applies only to instruments with option 14 (frequency extender control bus).

When the readouts are disabled by a 'DISPzOFF' command, the leftmost digit is illuminated as '[' and the rightmost digit as ']'; the brackets serve as a standby indication. Error messages will continue to be displayed, but frequency and level will not.

GENERATING A FIXED FREQUENCY

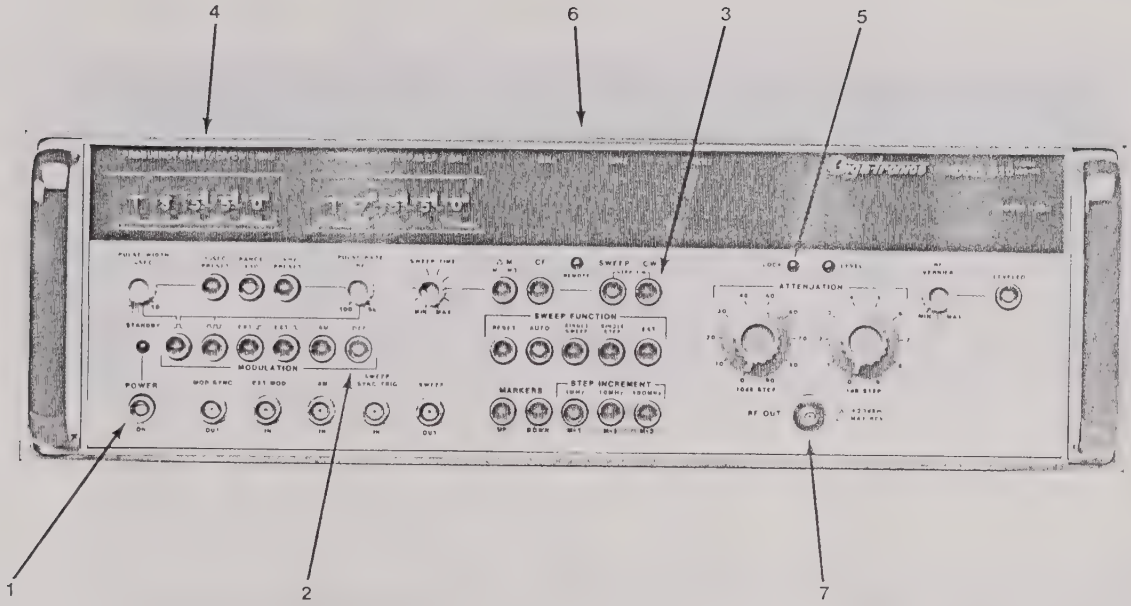

1. Power on
2. Modulation off
3. Generate CW on
4. Set leverwheel switch to desired frequency
5. Verify 'LOCK' indicator is lit
6. Check frequency readout
7. Output frequency is available at RF OUT connector

SETTING SIGNAL OUTPUT LEVEL

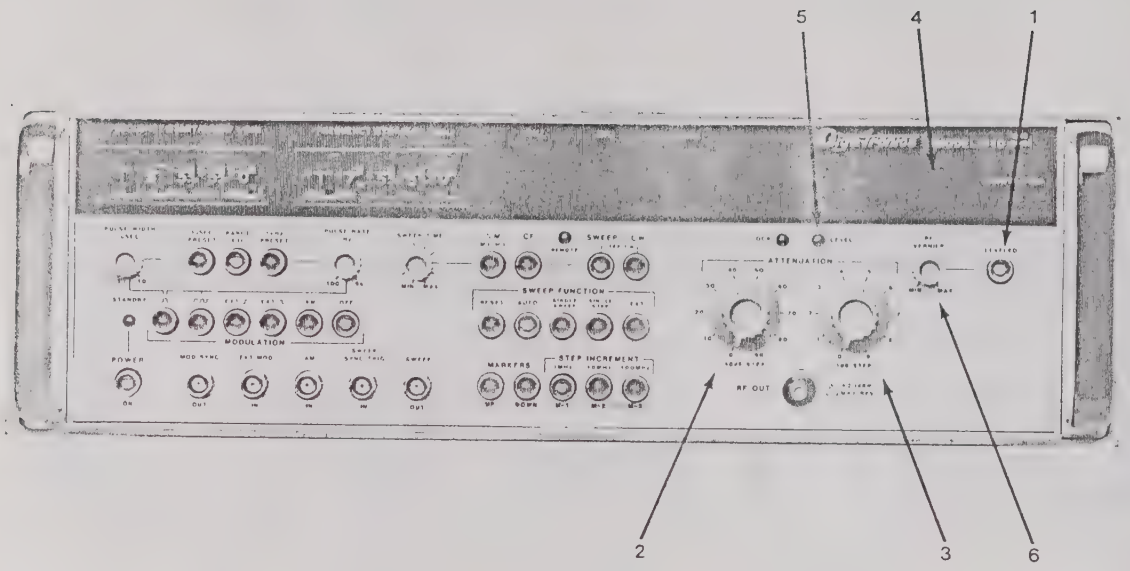

1. Push the 'LEVELED' button (this refers all attenuation settings to a 0 dBm standard).

2. Set the 10 dB step attenuator to any of the ten available positions.

3. Set the 1 dB step attenuator to any of the ten available positions.

4. Read RF output power at the power readout.

5. 'LEVEL' LED lights to indicate when output signal is leveled (that is, the leveling system is within the operating limits of its range).

6. Vernier control of the output power (over a control range of approximately 10 dB) can be obtained by releasing the 'LEVELED' pushbutton and adjusting the RF vernier knob; this is also a means of getting maximum power above 0 dBm.

PULSE MODULATION

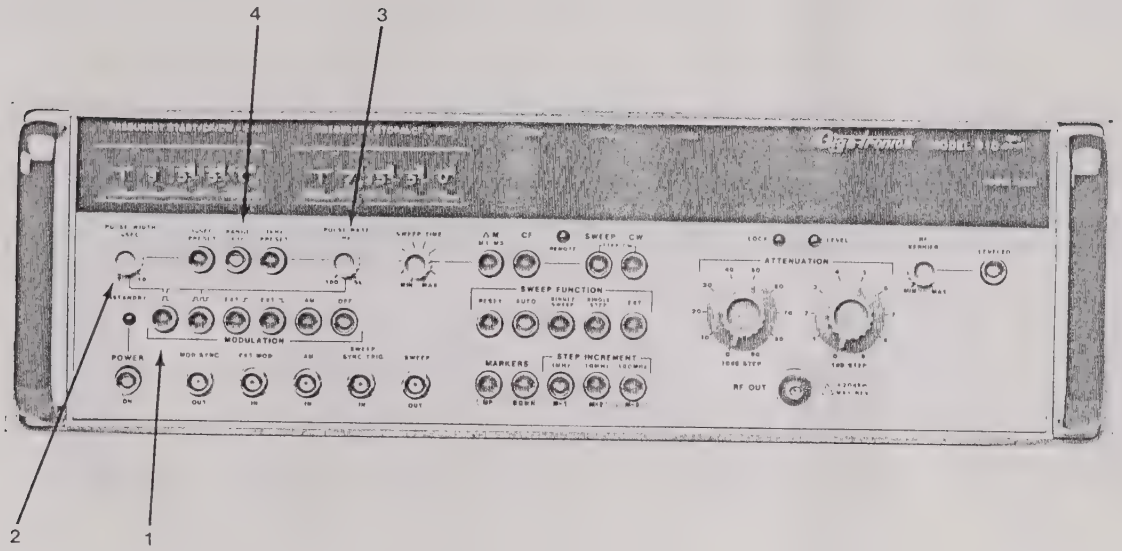

1. Select pulse modulation (⎍⎍)

2. Select 1 microsecond fixed pulse width, or release the 1 microsecond preset button and use the pulse width knob to vary the width over the adjustment range.

3. Select 1 kHz fixed pulse rate, or release the 1 microsecond preset button and use the pulse rate knob to vary the rate over the adjustment range.

4. If desired, use the X10 button to increase the pulse rate by a factor of 10.

SQUARE WAVE MODULATION

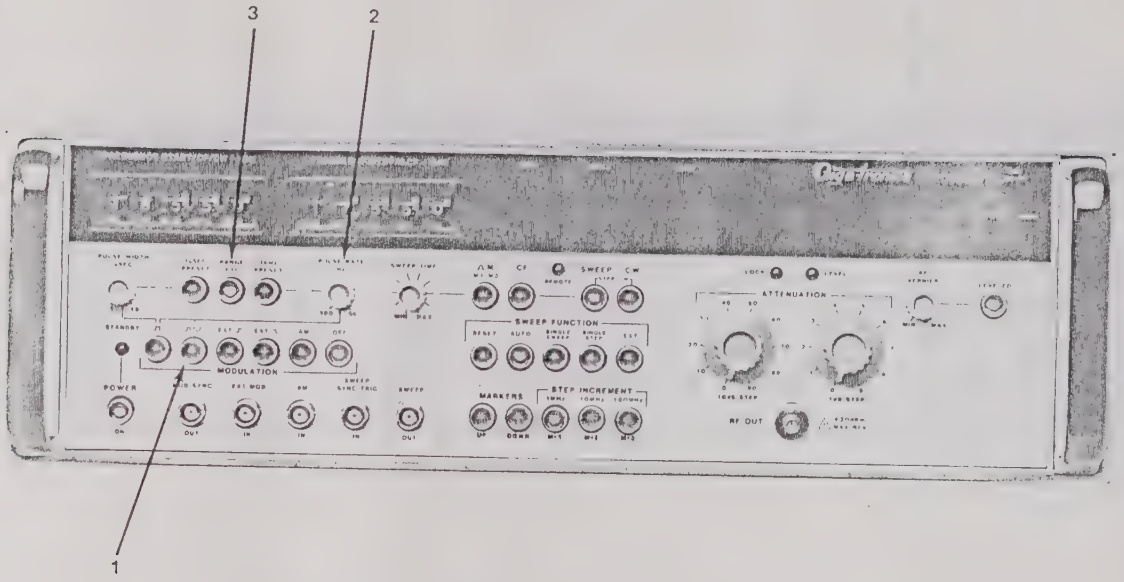

1. Select square wave modulation (⎍⎍⎍).

2. Select 1 kHz fixed rate, or release the 1 kHz preset button and vary the rate over the adjustment range.

3. If desired, use the X10 button to increase the rate by a factor of 10.

EXTERNAL PULSE MODULATION

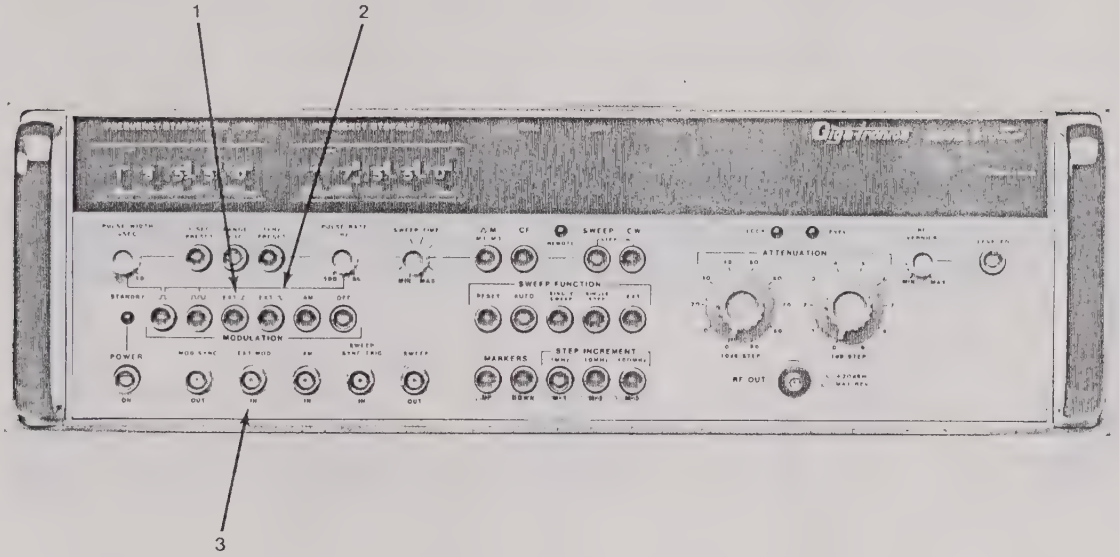

1. Select external high trigger (EXT ⎍); in this mode, pulse 'on' is triggered at >+2.2 volts, and pulse 'off' is triggered at <+0.8 volts.

2. Or, select external low trigger (EXT ⎏); in this mode, pulse 'on' is triggered at <+0.8 volts, and pulse 'off' is triggered at >+2.2 volts.

3. Apply the external signal at the 'EXT MOD IN' connector. The instrument will accept any TTL-level signal from 10 Hz to 1 MHz with a minimum pulse width of 0.1 microsecond.

NOTE:

This instrument will not operate properly when it is set for external pulse modulation (whether for high or low triggering) if there is no input pulse applied. During modulation, output leveling is driven by a sampling system which requires input pulses to trigger the sample. In the absence of a modulation input, the instrument will not be leveled, output power may drift or may remain "off" continuously, the power readout may be incorrect and the level LED may go out.

EXTERNAL AMPLITUDE MODULATION

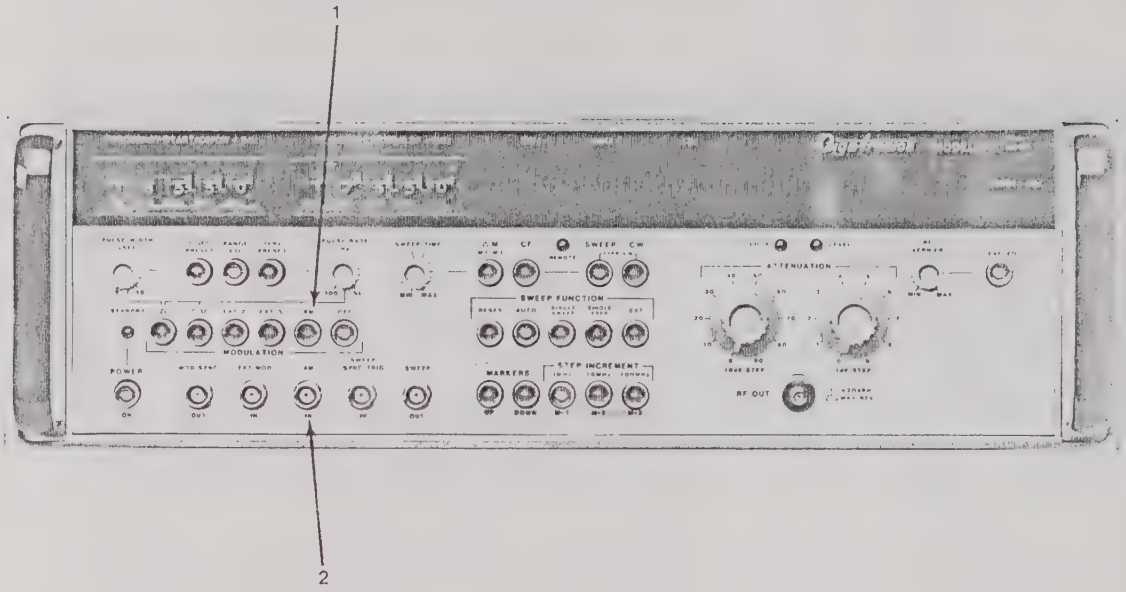

1. Select amplitude modulation.

2. Apply an external signal (10 Hz to 5 kHz) to the 'AM IN' connector. The percentage of modulation is linearly related to input amplitude; a 1 Vpp input results in 50% modulation.

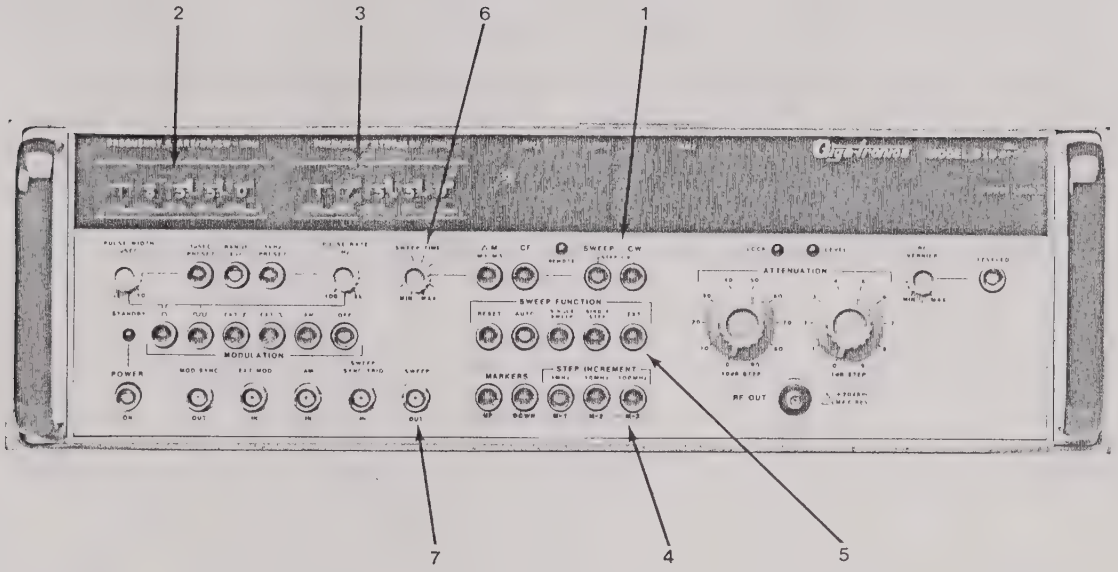

1. Select 'STEP CW' by pressing the sweep and CW buttons simultaneously.

2. Use the leverwheel switches to set the desired start frequency.

3. Use the leverwheel switches to set the desired stop frequency.

4. Select the step increment (1 MHz, 10 MHz, or 100 MHz).

5. Select the sweep function:

   a. Select 'AUTO'. This initiates a sweep, increasing from the start frequency to the stop frequency, which resets to the start frequency and repeats indefinitely.

   b. Or, select 'SINGLE SWEEP'. This initiates a sweep from start frequency to stop frequency, which resets to the start frequency but does not repeat.

   c. Or, select 'SINGLE STEP'. Each time this button is pushed, output frequency increases by one increment, until the stop frequency is reached and the sweep resets to the start frequency.

   d. If the 'EXT' button is pressed, a single sweep or single step (depending on which mode was activated last) can then be initiated by applying a TTL-low pulse to the 'SWEEP SYNC TRIG IN' connector.

   e. Pushing the 'RESET' button at any time during a sweep will return the instrument to the start frequency.

6. Select sweep time, if the instrument is in 'AUTO' or 'SINGLE SWEEP' mode; there are ten available speeds.

7. A 0V to +10V ramp, with voltage proportional to progress through the sweep, is available at the 'SWEEP OUT' connector.

8. During sweep retrace, a TTL-low pulse is available at the 'PEN LIFT' output connector on the rear panel.

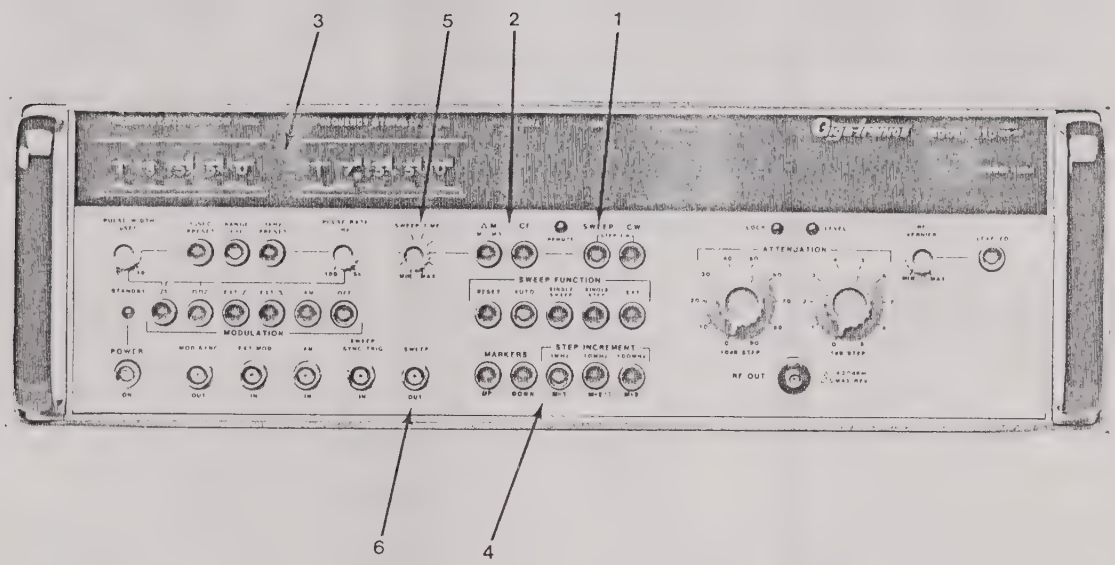

1. Select analog sweep mode (push the 'SWEEP' button).

2. Specify the type of analog sweep desired:

   a. Press the '△M' button; this causes the instrument to sweep between the first and third marker frequencies.

   b. Or, press the 'CF' button; this causes the instrument to sweep through a range defined by a center frequency and an offset.

   c. If neither the '△M' nor the 'CF' button is pressed, the instrument will sweep between the start and stop frequencies set by the leverwheel switches.

3. Set the start frequency and stop frequency using the leverwheel switches (in 'CF' mode, these values correspond to the center frequency and the offset; in '△M' mode, these values do not affect operation).

4. Set the frequency markers with the step increment buttons, which are labeled 'M-1', 'M-2', and 'M-3'. Press the appropriate marker button and adjust its frequency with the 'UP' and 'DOWN' buttons. Marker four may be set by pressing 'M-1' and 'M-3' simultaneously, marker five by pressing 'M-2' and 'M-3'. Release the marker buttons to escape the marker setting mode.

5. Select sweep time; there are ten available speeds.

6. A 0V to +10V ramp, with voltage proportional to progress through the sweep, is available at the 'SWEEP OUT' connector.

7. A voltage directly proportional to output frequency is available at the 'ANALOG SWEEP' output connector on the rear panel; this output is suitable for driving an oscilloscope raster.

8. Pulses coincident with the marker frequencies are available at the 'UNBLANK/MARKERS' output connector on the rear panel; this output is suitable for modulating the Z-axis input of an oscilloscope. The level of the marker pulse is -5 volts; the "unblank" (standard trace) level is 0 volts; the retrace level is +5 volts.

9. During sweep retrace, a TTL-low pulse is available at the 'PEN LIFT' output connector on the rear panel; this output may be used to control a recorder pen or other data recording device.

IV. REAR PANEL OPERATION

The rear panel of the Series 910 generator provides the means by which the instrument may be operated in conjunction with auxilliary equipment.

EXTERNAL ALC

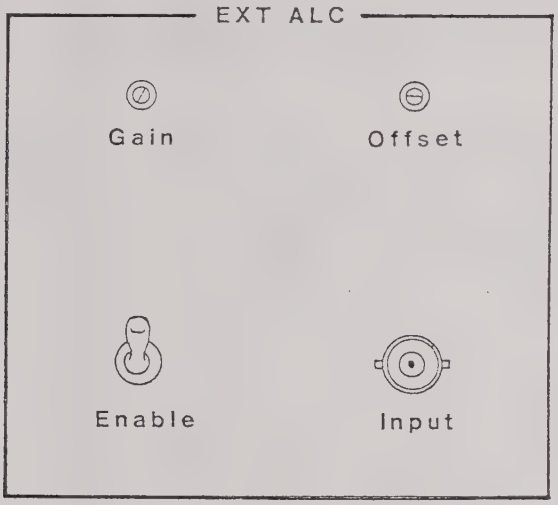

Figure 1.10

The external ALC function provides remote leveling capability. The circuit is designed to operate with a directional coupler/diode detector having a standard negative output. Gain and offset adjustments permit calibration of the instrument to match individual detectors. Note that losses in the cable between the instrument RF output and the remote detector will place a limit on both maximum output and leveling range.

1 -- Connect the remote cable and detector to the Series 910. Connect the coupler/detector ouput to the rear panel 'EXT ALC' connector.

2 -- Connect a power meter to the detector output and set the 'EXT ALC' enable on.

3 -- With the front panel attenuators at 0 and the vernier off, adjust the rear panel 'GAIN' to maximum (clockwise) and then adjust the rear panel 'OFFSET' for a power meter reading of 0 dBm (assuming the cable loss permits).

4 -- Select -9 dBm on the front panel 1 dB attenuator. Readjust the offset for a power meter reading of -9 dBm.

5 -- Reset the instrument to 0 dBm out, and adjust 'GAIN' for a power meter reading of 0 dBm.

6 -- Repeat steps 4 and 5 as needed.

EXTERNAL MASTER REFERENCE

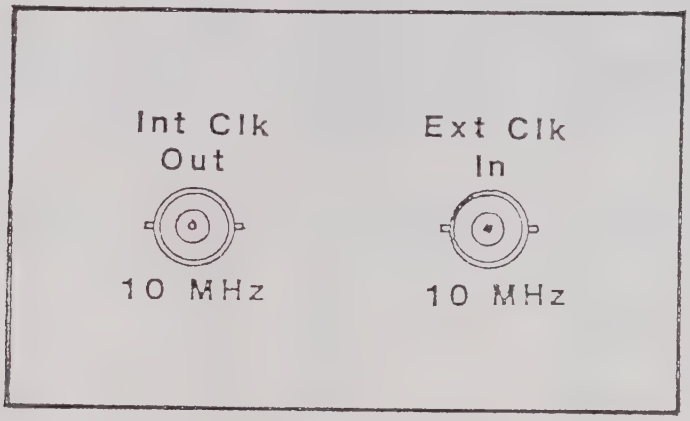

Figure 1.11

The clock output provides a buffered 10 MHz signal derived directly from either the internal master reference or any external standard applied. This output will drive a 50 ohm load to 2 Vpp. The clock input accepts an external 10 MHz standard with an amplitude between .5 and 5 Vpp. The external clock mode is activated by the application of this signal.

EXTERNAL PHASE-LOCK REFERENCE

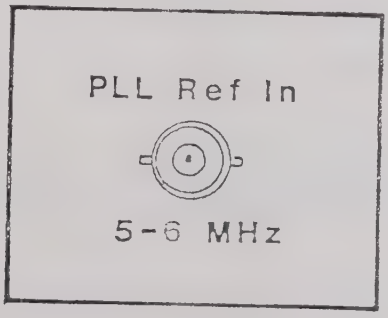

Figure 1.12

By applying an external signal to the BNC connector shown in figure 1.12, it is possible to shift the RF reference and, in turn, the RF output on a one for one basis. The frequency range of the input is from 5 MHz to 20 MHz and the maximum rate of change is approximately 50 kHz. The RF output frequency will be:

Fout = fset + (fx - 5 MHz)

where Fout = RF output
fset = frequency setting of 910
fx = frequency of external signal

EXTERNAL PROGRAMMING -- IEEE-488

The Series 910 permits data bus control in accordance with the IEEE Standard Digital Interface for Programmable Instruments IEEE-STD 488-1978.

The following subsets of the standard are implemented:

SH1	Source Handshake	Complete Capability
AH1	Acceptor Handshake	Complete Capability
T8	Talker	Basic Talker, No Serial Poll No Talk Only, Unaddress if MLA
TE0	Extender Talker	No Capability
L4	Listener	Basic Listener, No Listen Only, Unaddressed if MTA
LE0	Extended Listener	No Capability
SR0	Service Request	No Capability
RL2	Remote/Local	No Local Lockout
PP0	Parallel Poll	No Capability
DC0	Device Clear	No Capability
DT0	Device Trigger	No Capability
C0	Controller	No Capability

1.0 IEEE-488 Hardware Configuration

1.1 Interface connector

The following table indicates the pin assignments for the rear panel 24 pin IEEE-488 interface connector.

Contact	Signal Line
1	D101
2	D102
3	D103
4	D104
5	E01
6	DAV
7	NRFD
8	NDAC
9	IFC
10	SRQ
11	ATN
12	Shield
13	D105
14	D106
15	D107
16	D108
17	REN
18	GND (6)
19	GND (7)
20	GND (8)
21	GND (9)
22	GND (10)
23	GND (11)
24	GND Logic

The contact assignments are those required by the IEEE-488 standard. Thus, most users need only connect a standard interface cable between their controller and the 910 interface connector.

1.2 Address Assignment

The remote control address is assigned by the five small switches next to the interface connector. Switch 1 is the LSB; and switch 5 is the MSB. Thus, to assign the 900 an address of 6 (listen address '&' and talk address 'F'), the switches would be set as follows:

Switch number	1	2	3	4	5
Switch setting	0	1	1	0	0

1.3 Syntax Configuration

The standard remote control syntax (as described in this manual) is enabled by setting S7 on the CPU PC board (A2) to the on (up) position. S7's off position is reserved for enabling a special syntax which might be required in unusual applications. The instrument is normally shipped from the factory with S7 set to the on position.

2.0 GENERAL COMMAND STRUCTURE

2.1 Character Representation

In this manual, the ASCII characters sent in a message will be represented in single quotes.

e.g.: 'MESSAGE' corresponds to a string of seven bytes whose hexadecimal values are $4D, $45, $53, $41, $47, $45.

Special characters will be represented as follows:

'<CR>'	Carriage return, $0D
'<LF>'	Line Feed, $0A
'b'	One or more spaces $20
'z'	Zero or more spaces
's'	One space
'd'	Decimal digit

2.2 Command Interpretation

The 910 uses a 40 character buffer to accept and store characters sent to it via the interface. Multiple sequential spaces are compressed to a single space character for storage in the buffer. The buffer's contents are interpreted and the buffer is reset upon receipt of a character sent with the EOI line asserted or upon receipt of any of the following delimiter characters:

'<CR>' '<LF>' ',' ':' ';' '/' '\'

Multiple commands may be sent in a single message if they are separated from each other by a space or one of the above delimiter characters. If the commands are separated by delimiter characters, each command will be interpreted individually upon receipt. If the commands are separated by spaces, they will not be interpreted until the entire message has been sent. Note that if spaces are used to separate commands, care must be taken to assure that the 40 character buffer does not overflow. Buffer overflow may cause some commands to be ignored.

2.3 Command format

Each command consists of a verb, followed by zero or more spaces, followed by an argument.

e.g.: 'GENzFIXED' GEN is the verb and FIXED is the argument

'FAz12.3E+3 FA is the verb and 12.3E+3 is the argument

2.4 Numeric Arguments

Frequency and level setting commands use numeric arguments (represented in command descriptions as 'n'). The format for numeric arguments (described below) is sufficiently flexible that no special formating will be necessary when using most IEEE-488 controllers. Signed or unsigned numbers are acceptable. Integers or decimal fractions are permitted and may be followed by a signed or unsigned one or two digit exponent. Leading zeroes are permitted, but spaces within a number are not permitted. The integer and optional fractional part are each restricted to a maximum length of 10 digits.

The following are examples of valid numeric arguments:

'b25.7' / '-32.1' / '0.3' / '2958.763E-2'

'6E-10' / '-000.000000001E+10' / 'b7b' / 'IE6'

3.0 COMMAND DESCRIPTIONS

Each Subsection describes a verb and its valid arguments. Most commands perform functions in a way that is similar to the 910's front panel controls except where noted.

3.1 'GEN' set signal generation mode

'GENzFIXED': generate fixed (CW) frequency
'GENzLSWP': locked sweep ('STEP CW' mode)
'GENzASWP': analog sweep from FA to FB
'GENzCSWP': analog sweep centered on FA; delta = FB
'GENzMSWP': analog sweep from MA to MC

3.2 'MOD' set modulation mode

'MODzOFF': modulation off
'MODzPULSE': internal pulse
'MODzSQR': internal square wave
'MODzAM': external AM (Instruments without 18-26 GHz band only)
'MODzEXT+': external (see note, p. 1-13)
'MODzEXT-': external (" " " ")

3.3 'MODRATE' set internal modulation rate
'MODRATEzFIXED': 1 kHz rate
'MODRATEzVAR': rate variable via front panel controls

3.4 'PWIDTH' set internal pulse width
'PWIDTHzFIXED': 1 usec width
'PWIDTHzVAR': width variable via front panel control

3.5 'AGC' set external modulation leveling loop time constant
'AGCzFAST': short time constant
'AGCzSLOW': long time constant

This command only influences the instrument's operation in the external pulse modulation modes. 'AGCzSLOW' allows the leveling loop to function at rates less that 1 kHz. 'AGCzFAST' provides a faster loop response at higher modulation rates.

3.6 'LVERN' Enable/disable front panel level vernier control
'LVERNzON': Enables
'LVERNzOFF': Disables

3.7 'EXTALC' Enable/disable external ALC
'EXTALCzON': Enables
'EXTALCzOFF': Disables

3.9 'SWEEP' Control sweep function

The 'SWEEP' command has seven valid arguments. The commands provide the same sweep functions as the front panel pushbuttons. Separate commands are used to control triggered sweep via the sweep trigger input connector and to control non-triggered modes.

'SWEEPzAUTO': Automatic repetitive sweep
'SWEEPzONCE': Single sweep
'SWEEPzSTEP': Single step sweep. One step equal to FC is done each time this command is received.
'SWEEPzTRIG': Triggered single step. A pulse on the sweep trigger input causes one complete sweep.
'SWEEPzSTPTRIG': Triggered single step. A pulse on the sweep trigger input does one step equal to FC.
'SWEEPzRESET': Reset. Immediately terminates sweep. To restart the sweep, send the 'SWEEP' command for the function desired.
'SWEEPzNUL': The action of this command depends upon what the current sweep function is. If it is 'ONCE', 'STEP', or 'RESET', it has no effect. If it is 'TRIG' or 'STPTRIG', 'NUL' acts the same as 'RESET'. If it is 'AUTO', it acts the same as 'RESET', but not until the end of the current sweep.

The front panel sweep reset button functions in both local and remote modes.

3.10 'SWPRATE' Set Sweep Rate

Valid arguments are the ASCII letters 'A' through 'J'. The letters correspond to the positions of the front panel control, 'A' being the slowest.

4.0 SET FREQUENCY COMMANDS

The six frequency commands each require a numeric argument. Digits specifying a frequency resolution in excess of the instrument's capabilities are ignored (no rounding). The instrument's frequency resolution is 1 MHz except where noted below. The argument always specifies frequency in MHz (e.g., 'n' = '2345' specifies 2.345 GHz). In the range specifications given with each command, the following conventions are used to specify limits.

F min = minimum CW generate frequency
0 Hz except when F min = other than 50 MHz.

F max = maximum CW generate frequency

4.1 'FA' Set start frequency

'GENzFIXED': Sets output frequency
F min $\leq$ 'n' $\leq$ F mx, 1 kHz resolution with option 03
'GENzUSWP': Set sweep start frequency
F min $\leq$ 'n' < F max
'GENzLSWP': Set sweep start frequency
F min $\leq$ 'n' < F max, 1 kHz resolution with option 03

4.2 'FB' Set stop frequency

'GENzUSWP': Set sweep stop frequency
'FAzn' < 'n' $\leq$ F max
'GENzLSWP': Set sweep stop frequency
'FAzn' < 'n' $\leq$ F max, 1 kHz resolution with option 03
'FB' commands are ignored in 'GENzFIXED' mode

4.3 'FC' Set frequency step

'GENzUSWP': Set step
1.0 < 'n' $\leq$ 'F max'
'GENzLSWP': Set step
0.001 $\leq$ 'n' < F max, 1 kHz resolution with option 03
0.1 $\leq$ 'n' $\leq$ F max without option 03
'FC' commands are ignored in 'GENzFIXED' mode.

4.4 'MA' Set first marker frequency

'MAzn': "n" equals first marker frequency, in MHz

4.5 'MB' Set second marker frequency

'MBzn': "n" equals second marker frequency, in MHz

4.6 'MC' Set third marker frequency

'MCzn': "n" equals third marker frequency, in MHz

5.0 SET LEVEL COMMANDS

The three set level commands all require a numeric argument. The arguments specify levels in dBm with .1 dB resolution. Digits specifying a finer resolution are ignored (no rounding). The 'LEVEL' command causes appropriate values for the step attenuator and leveling loop programming to be computed from the argument. The computation causes the step attenuator to switch at argument values which are evenly divisible by 10 (e.g., between '-29.9' and '-30.0).

Some applications may require that very small but accurate level changes be made. If such a change causes a change in step attenuator setting, the accuracy of a very small change will be lost. Therefore, the 'LVLCRS' and 'LVLFNE' commands have been provided to independently set the step attenuator and leveling loop. Each of the following three messages will program the instrument to -28.5 dBm.

'LEVELz-28.5' (attenuator at -20 dB)
'LVLCRSz-20bLVLFNEz-8.5'
'LVLCRSz-30bLVLFNEz1.5'

5.1 'LEVEL' Set output level

The argument specifies that output level in dBm. Valid argument ranges are:

90 dB remote attenuator: $-99.9 \leq$ 'n' $\leq +15.0$
110 dB remote attenuator: $-119.0 \leq$ 'n' $\leq +15.0$

5.2 'LVLCRS' Set step attenuator

The argument specifies the step attenuator setting in dB. It must be evenly divisible by 10.0. Valid ranges are:

90 dB remote attenuator: $-90.0 \leq$ 'n' ≤ 0.0
110 dB remote attenuator: $-110.0 \leq$ 'n' ≤ 0.0

5.3 'LVLFNE' Set leveling loop

The argument specifies the leveling loop program value in dB. Output power is the sum of the 'LVLCRS' and 'LVLFNE' arguments. The range of valid arguments is $-15.0 \leq$ 'n' $\leq +15.0$

5.4 Leveling loop range limitations

The leveling loop range is limited by the maximum output power which the instrument can produce. At very low levels, the on-to-off ratio of the instrument's PIN attenuators may also limit the loop's range. Both the front panel vernier control and cable normalization (if option 09 installed), if enabled, may place demands upon the leveling loop in addition to those of the level commands. When the loop's dynamic range is exceeded, the front panel level light will go out. This condition can also be checked remotely by sending a 'SENDzSTATUS' command and examining the message returned by the instrument (see Section 6.4).

If a very large correction is needed for cable normalization (when option 09 is installed), the dynamic range of the D/A converter which programs the leveling loop may be exceeded, causing 'ERRORs12' to be issued. 'ERRORs12' will also be issued upon receipt of invalid level command arguments by instruments with remote control attenuators. Leveling loop accuracy is reduced at very low levels (below about -12 dB). The internal power meter circuitry operates down to approximately -17 dB. Lower levels will cause the power display to blank.

6.0 REPLY MESSAGES

A reply message will be sent over the interface by the 900 whenever it is addressed to talk. If unaddressed in the middle of a message, any remaining characters are cleared from the output buffer. EOI is asserted during the last character ('<LF>') of each message. The type of message sent is determined by the 'SEND' commands described in the following subsections. If an error condition exists, a 'SENDzERROR' type message will be sent instead of the message type requested except for 'SENDzNUL' which always returns a nul line ('<CR><LF>').

Numeric values have leading zeroes to the left of the units position suppressed to spaces. Numeric precision is expressed as (X) for integers and (X.Y) for numbers with fractional parts where X and Y specify the number of digits before and after the decimal point, respectively. For signed numbers, the sign is included in X [e.g., '+22.7' is (3.1)].

6.1 'SENDzNUL' Nul line

Message will be a nul line ('<CR><LF>') even if an error condition is present.

6.2 'SENDzFREQ' Frequency message

The value sent always represents frequency in MHz.

'GEN' modes: 'sFsOUTsn<CR><LF>'
'n' = unsigned (5) in 1 MHz resolution modes
'n' = unsigned (5.3) in 1 kHz resolution modes
'n' = has a value of 0 when sweep is reset

6.3 'SENDzPOWER' Power message

The value sent represents power in dB or dBm, as appropriate, and is always signed (4.1). If no valid power reading is avaliable, the message is sent with 'n' = '-----'.

'POWERzINT' sends 'sPsINTsn<CR><LF>'
'POWERzEXT' sends 'sPsEXTsn<CR><LF>' (if option 09 installed).
'POWERzDELTA' sends 'sPsDELsn<CR><LF>' (if option 09 installed).
'sPsCALsn<CR><LF>' is sent while the instrument is doing a cable measurement sweep (if option 09 installed).

6.4 'SENDzSTATUS' Status message.

The message sent is:
'sLOCKsdsLEVELsdsCALsd<CR><LF>'
where each 'd' is either '1' or '0' to represent true or false. 'LOCK' and 'LEVEL' are true when their corresponding front panel lights are on. 'CAL' is true when cable normalization is enabled (if option 09 installed).

6.5 'SENDzERROR' Error message.

The message sent is '<CF><LF>' if no error exists. When an error condition does exist, the message sent is 'sERRORsdd' where 'dd' is the error code displayed on the front panel.

7.0 CABLE NORMALIZATION (if option 09 installed)

Changing between local and remote control does not alter the cable normalization functions within the instrument. Thus one may, if desired, calibrate the loss of a cable using the front panel controls; and then, operate the instrument via the remote control interface. One can determine if cable normalization is enabled by using the 'SENDzSTATUS' message (see Section 6.4). Cable normalization is controlled remotely by using the command sequences given in the following subsections.

7.1 To sweep a cable and record loss data

1. Connect cable to be calibrated between the instrument's RF output and power meter input.

2. Send 'CALzRUN'.

3. The status message will be 'CALs0' while data is being taken and 'CALs1' when calibration is complete. Normalization will be enabled.

7.2 To disable normalization, send 'CALzNO'.

7.3 To enable normalization with current data, send 'CALzYES'.

7.4 To delete previously recorded data send 'CALzCLEAR'. Normalization will be disabled and cannot be re-enabled until another calibration sweep has been done.

8.0 INTERFACE INITIALIZATION VALUES

The IEEE-488 interface is initialized upon assertion of IFC by the controller, upon instrument power up (CPU reset), and whenever the rear panel address switch settings are changed. The 910's remote control data is initialized to the 'GENzFIXED' mode with no modulation. Frequency and output level are initialized to the minimum values. The power meter is configured to measure internal power (instruments with option 09 only).

PEN LIFT

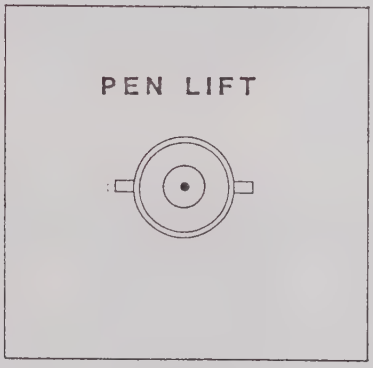

Figure 1.13

The pen lift signal is provided to control a recorder pen. The signal goes low (a transistor to ground) whenever the sweep ramp is resetting or the sweep is in hold. During the sweep, the transistor is off and the signal is pulled to +5 V through a resistor.

POWER METER OUTPUT (option 09)/EXTERNAL MODULATION INPUT

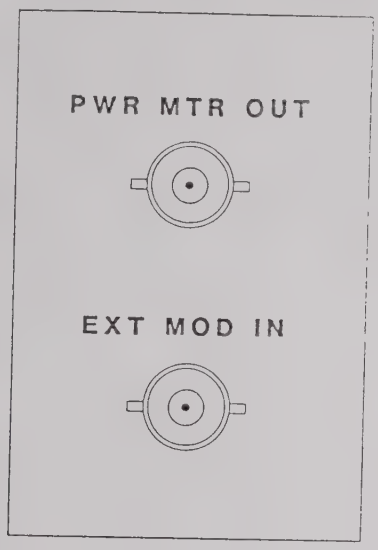

Figure 1.14

The power meter output provides an analog signal proportional to the external power meter reading in all modes of operation. The signal is 0.5V/dBm, nominal, with +10V at +10 dBm and -10V at -30 dBm into 2 kohms, min.

The external modulation input (if installed) provides a rear panel input for either the external pulse or AM input signal.

SECTION TWO

PERFORMANCE SPECIFICATIONS

Frequency Characteristics

FREQUENCY RANGE: Specified by Model No. (e.g., Model 910/2-12 has a range of 2-12 GHz)

FREQUENCY RESOLUTION: 1 MHz (see note 1)

FREQUENCY ACCURACY/STABILITY: Same as time base

INTERNAL TIME BASE FREQUENCY/ACCURACY: 10 MHz, ± 1 X 10E-6 or better

INTERNAL TIME BASE STABILITY: <1 X 10E-6/year

EXTERNAL TIME BASE: 10 MHz, ± 1 X 10E-6 or better, at 0.5 Vpp to 5 Vpp (overrides internal time base)

TIME BASE OUTPUT: Buffered 10 MHz, 2 Vpp into 50 ohms, derived from internal time base (or from external time base, if in use)

Spectral Purity

HARMONICS, SUBHARMONICS: <-55 dBc

SPURIOUS (nonharmonics): <-55 dBc

LINE RELATED: <-45 dBc

Output Characteristics

MAXIMUM LEVELED OUTPUT POWER: +5 dBm (single band units, and any unit that includes the 18-26 band)
+3 dBm (all other units)

OUTPUT LEVEL ACCURACY: ± 1 dB to 18 GHz, ± 2 dB from 18 to 26 GHz

OUTPUT ATTENUATION: 119 dB in .1 dB steps (instruments to 18 GHz); 99 dB in .1 dB steps (instruments to 26 GHz)

LEVEL ADJUSTMENT (vernier): -5 to +15 dB

OUTPUT IMPEDANCE: 50 ohms, nominal

Pulse Modulation Characteristics

SQUARE WAVE: 1 kHz fixed rate, or 100 Hz to 50 kHz variable rate

PULSE: 1 kHz fixed rate, or 100 Hz to 50 kHz variable rate. 1 microsecond fixed width, or 0.1 to 10 microsecond variable width.

ON/OFF RATIO: >60 dB (instruments to 18 GHz)
>30 dB (instruments to 26 GHz)

RISE/FALL TIMES: <25 nanoseconds

OVERSHOOT/UNDERSHOOT/RINGING: ± 2 dB, max

SETTLING TIME: ± 1 dB within 100 nsec

EXTERNAL MODULATION: TTL level signal; 10 Hz to 1 MHz rate; 0.1 microsecond minimum width. Rising edge or falling edge triggering. ± 10 volts damage level.

SYNC OUTPUT: TTL compatible; follows modulation waveform

External Amplitude Modulation (instruments to 18 GHz)

FREQUENCY RESPONSE: 10 Hz to 5 kHz at 3 dB points referenced to 1 kHz

MODULATION DEPTH: 0 to 20 dB

INPUT IMPEDANCE: 500 ohms, AC coupled

INPUT SENSITIVITY: 1 Vpp for 50% modulation at 1 kHz

Digital Sweep Operation ('STEP CW' mode)

SWEEP RANGE: Selectable over entire frequency range

SWEEP FUNCTION: Automatic recycle, single sweep, single step

STEP INCREMENTS: Via front panel switches: 1 MHz, 10 MHz, or 100 MHz.
Via remote programming: any increment within the frequency resolution of the instrument.

SWEEP TIME: 10 rates (from 10 msec/step to 10 sec/step) in 1-2-5 sequence

RAMP OUTPUT: 0 to 10V, ± 10%, proportional to progress through the defined sweep range

SWEEP TRIGGER INPUT: TTL low to initiate single step or single sweep

PEN LIFT: TTL low during sweep retrace

Analog Sweep Operation ('SWEEP' mode)

SWEEP RANGE: Selectable over entire frequency range

SWEEP FUNCTION: Automatic recycle or single sweep

SWEEP MODES: 'SWEEP' (sweep limits defined by preset start and stop frequencies F1 & F2), '△M' (sweep limits defined by first and third markers), 'CF' (sweep limits defined by center frequency and an offset).

SETTABILITY: Via front panel switches: sweep limits settable in 1 MHz increments
Via remote interface: sweep limits settable in any increment within the resolution of the instrument

SWEEP LENGTH: 1 MHz to full range

START FREQUENCY ACCURACY: $\pm$ 5 MHz

SWEEP FREQUENCY LINEARITY: $\pm$ 10 MHz, worst case

RESOLUTION: 2 MHz for sweep widths $\geq$ 300 MHz; 75 kHz for widths <300 MHz

SWEEP RATE: Ten rates (from 600 MHz/msec to approx. 1200 MHz/sec); each setting is half of previous rate

MINIMUM SWEEP TIME: 10 msec per band, nominal

RESIDUAL FM (sweep mode): <100 kHz RMS

MARKERS: Five frequency markers (M1, M2, M3, M4, M5) may be set via the front panel switches, at any frequency from F1 to F2; eight markers are available via the remote interface. In $\triangle$M mode, the sweep is between M1 and M3, and the remaining markers may be placed anywhere between M1 and M3.

MARKER RESOLUTION: 8 MHz for sweep widths $\geq$ 300 MHz; 300 kHz for sweep widths <300 MHz

SWEEP SYNC TRIGGER INPUT: TTL low to initiate single sweep

RAMP OUTPUT: 'Sweep Out' (0 to 10V, proportional to progress through the sweep in any mode)

PROPORTIONAL ANALOG OUTPUT: .5V/GHz $\pm$ 1%

UNBLANK/MARKER OUTPUT: Composite signal for Z-axis modulation of oscilloscope. Levels: dark = +5 volts, unblanking = 0 volts, marker on = -5 volts.

General

REMOTE INTERFACE: IEEE STD 488-1978

OPERATING TEMPERATURE RANGE: 0 to +50°C

WARM-UP TIME: 20 minutes, max

ENVIRONMENTAL REQUIREMENTS: Type tested to MIL-T-28800C, type III, Class 5, Style E

POWER: 100/120/220/240 VAC ± 10%, 50-400 Hz, 200 W max

DIMENSIONS: Width 16.75", Height 5.25", Depth 24", Weight 65 lbs, nominal

NOTE 1 -- Frequency Resolution

An input is provided on the rear of the instrument marked PLL Ref In/5-6 MHz. A signal applied at this input will override the internal 5 MHz reference to the phase lock loop that controls the reference YIG oscillator. Any shift in this frequency will cause a one-for-one shift in the RF output frequency (for example, an input of 5.1 MHz will add 100 MHz to the selected output frequency). Varying the input across a 5-6 MHz range permits selection of frequencies between 1 MHz increments. For most instruments, the effective range of this input is 4 to 15 MHz (inputs below 5 MHz subtract from the output frequency) and may be varied at a rate within the bandwidth of the phase lock loop (typically, 50 kHz).

A low frequency synthesizer may be applied to this input in order to achieve greatly increased resolution. A swept frequency input may be used to produce a narrowband swept RF output.

SECTION THREE

THEORY OF OPERATION

The following is a glossary of the block-diagram symbols used in this manual. Some of them are unusual figures devised to meet the special descriptive requirements of microwave synthesizers.

DIGITAL INFORMATION---Data or instructions coded in binary form, used by the system computer to control the instrument and its various circuits.

DIGITAL TO ANALOG CONVERTER---A circuit which receives a binary number in digital code, and produces an output analog signal, the amplitude of which is proportional to the binary number.

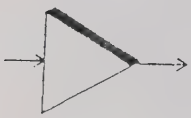

AMPLIFIER/DRIVER/BUFFER---A circuit which conditions the analog output of one circuit to make it compatible with the input requirements of another circuit.

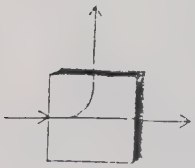

COUPLER---A device which, by induction, takes a sample of the signal passing through it for use in auxilliary circuits.

STEP-ATTENUATOR---A programmable device which attenuates (reduces the power of) the signal passing through it by fixed increments.

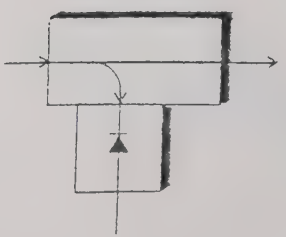

LEVEL COUPLER/DETECTOR---A device used to measure the power level of a signal passing through it; it produces an analog signal proportional in amplitude to the detected power.

FREQUENCY DIVIDER---A circuit which accepts a frequency input, and produces a frequency output equal to the input divided by some number.

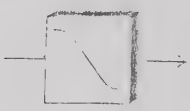

LOW-PASS FILTER---A circuit designed to pass relatively low frequencies while suppressing relatively high frequencies; often used to block undesired harmonics.

ISOLATOR---A ferrite device which passes signals in one direction and blocks signals in the reverse direction; used to prevent a load from reflecting energy back into a microwave oscillator.

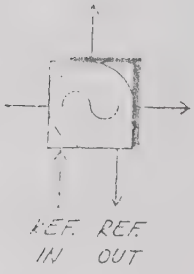

MASTER REFERENCE---The highly stable fixed 10 MHz signal to which all oscillators in the system are phase-locked. The standard timebase is a quartz oscillator built into the instrument; any external 10 MHz source can be substituted for it simply by connecting the source to the reference input.

PULSE MODULATOR---A PIN diode circuit used as a solid-state switch in order to turn the signal passing through it on and off; located inside the microwave modules.

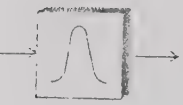

LEVELER---A PIN diode circuit used as a variable attenuator in order to control the power of the signal passing through it; located inside the microwave modules.

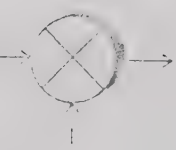

MIXER---A device which produces an "intermediate frequency" (IF) equal to the difference between its two input frequencies.

VOLTAGE CONTROLLED CRYSTAL OSCILLATOR (VCXO)---A crystal oscillator, the output frequency of which can be adjusted by means of a control voltage.

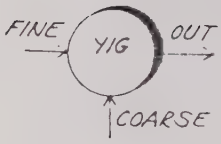

YIG-TUNED TRANSISTOR OSCILLATOR (YIG)---A microwave frequency oscillator, named for its tuning element which is composed of Yttrium-Iron-Garnet. Coarse and fine frequency adjustment are performed by controlling the current through two tuning coils.

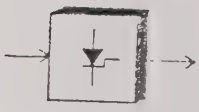

STEP-RECOVERY DIODE MULTIPLIER---A device that produces an output signal rich in harmonic multiples of the input frequency.

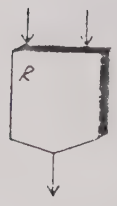

PHASE LOCK LOOP---A circuit which compares two frequency inputs (a fixed reference frequency and a variable frequency), determines the phase-frequency difference between them, and produces a correction signal for the variable source in order to reduce the difference. When the loop is "locked" the two inputs are of equal frequency.

SOLID STATE SWITCH---A PIN diode network used to open or close a signal path between one or more inputs and one or more outputs; located inside the microwave modules.

THE MICROPROCESSOR SYSTEM

The 910 series of microwave synthesizers owes much of its versatility to the microprocessor and memory system. Because control software can be rewritten much more readily than control hardware can be rebuilt, Giga-tronics's memory-intensive approach has made this an extremely adaptable instrument, which can be tailored to meet user requirements without obliging the purchaser to pay for unwanted features. Special capabilities can be added without elaborate and costly refitting. And, because there is much unused address space, the instrument still has room to grow.

All Giga-tronics Microwave Synthesized Signal Generators use a 6809 microprocessor, with its internal clock controlled by a 3.579 MHz crystal. This clock frequency was selected to minimize beat notes generated by its harmonics and the various instrument frequencies, most of which are even multiples of 1 MHz.

The microprocessor controls, and communicates with, other circuits by means of several Peripheral Interface Adapters or PIAs. These devices act as windows through which information and instructions are transmitted to and from the processor's 8-bit data bus. The microprocessor, the PIAs and the semiconductor memory together make up a microcomputer dedicated to controlling the instrument; these elements will be referred to collectively as the computer.

The standard memory package includes a memory board holding 4K of RAM and 24K of ROM, with a socket providing room to add another 4K of ROM without hardware changes. In addition, the microprocessor board includes a 1K 'RESET' ROM, which is programmed with initialization data, correction data for the leveling control system, and other information unique to the individual instrument. Since the 6809 can address 64K of memory, and the above devices account for 33K (with a further 4K taken up by I/O functions), there remains enough address space to add approximately 27K of memory, should the need ever arise.

The computer system generates and receives digital information required for operation of almost every instrument function. It receives and interprets the operator's commands, through either the front panel switches or the remote interface; it returns information to the operator, through either the front panel displays or the remote interface; it selects appropriate reference frequencies and intermediate frequencies in order to generate the RF output; it activates the appropriate YIG oscillators and tunes them; it selects appropriate filter lines, detectors and RF paths for a given frequency; it controls the power level and modulation of the output; it controls sweep operation; it monitors the functioning of the instrument and supplies error messages and fault indicators to the operator.

PHASE LOCK LOOPS - An Introduction

The phase lock loop circuit, or PLL, is crucial to the operation of digital synthesizers; the reader should understand this section fully before proceeding.

The purpose of a phase lock loop is to control the frequency of a variable oscillator so that it has the same accuracy and stability as a fixed reference oscillator. It works by comparing two frequency inputs, one fixed and one variable, and supplying a correction signal to the variable oscillator to reduce the difference between the inputs. Here is an example. Suppose we have a 10 MHz source with a stability of 1 part in 10-6/year, and we wish to transfer that stability to a voltage controlled crystal oscillator (VCXO). The 10 MHz source is applied to the reference input of a phase lock loop circuit. The signal from the VCXO is applied to the variable input. A phase detector in the PLL compares the two inputs and determines whether the variable input waveform is leading or lagging the reference. The phase detector has two outputs; pulses will appear at one of them (which one depends on whether the variable is leading or lagging), and the width of the pulses is proportional to the degree of phase difference. The pulses are averaged by a low pass filter and DC amplifier into a correction signal which (depending on polarity) causes the VCXO to increase or decrease in frequency in order to reduce the phase difference. When the two inputs match, the loop is said to be "locked", and the variable input from the VCXO then equals the reference input in phase, frequency, accuracy, and stability.

Figure 3.1

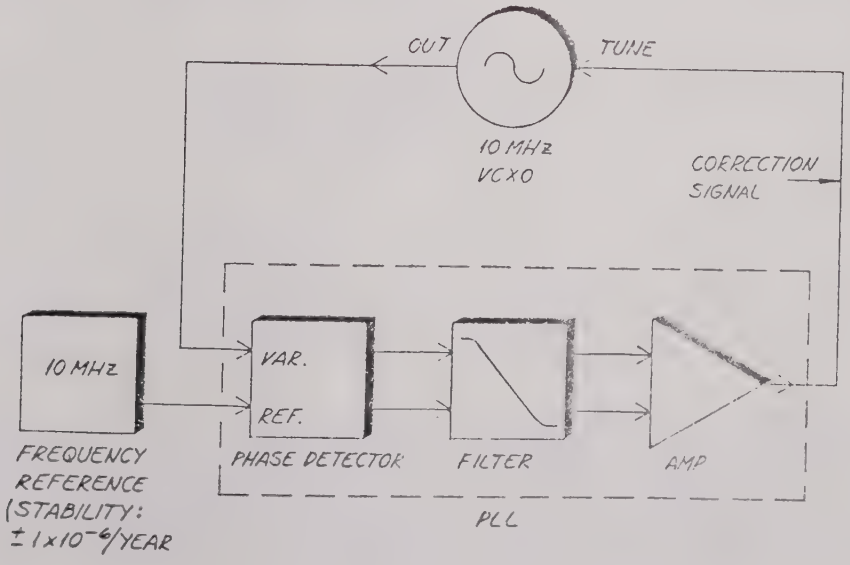

The preceding description would seem to imply that the two oscillators must be of equal frequency; if that were the case, the circuit would be of little use in a synthesizer. In fact the variable oscillator need not run at the same frequency as the reference oscillator. What usually happens is that a frequency divider is introduced between the output of the variable oscillator and the variable input to the PLL. The circuit can then be used to control a frequency that is a known multiple of the reference. If a divide-by-two circuit is used, the variable oscillator can be twice the frequency of the reference and still be phase locked to it; the variable oscillator acquires the stability of the reference without equalling its frequency. A 100 MHz VCXO can be controlled by a PLL using a 10 MHz reference, provided a divide-by-ten circuit intervenes between the VCXO's output and the variable input to the PLL. Then both inputs to the phase detector will be 10 MHz when the loop is locked.

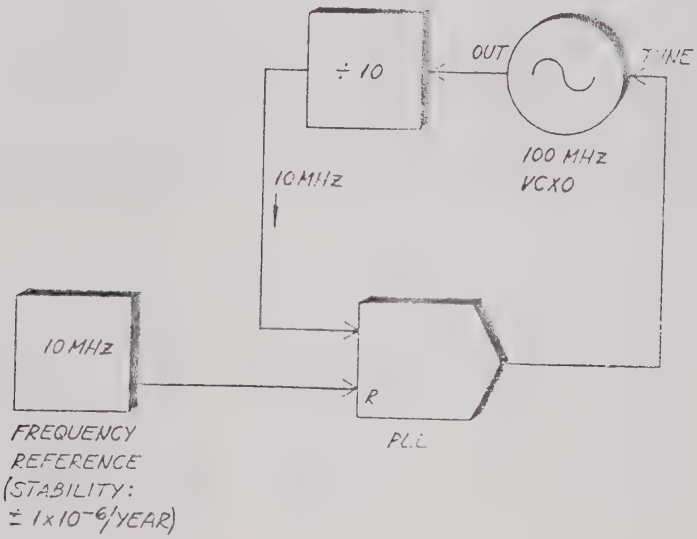

Figure 3.2

If a programmable divider is used, a number of different frequencies can be phase locked to the same reference, with the limitation that all must be even multiples of that reference. One of the PLLs employed in Giga-tronics synthesizers, for example, uses a "divide-by-N" circuit that can be programmed with 300 different integer divisors; therefore it can phase-lock 300 different frequencies to the same reference.

The phase lock loops used in Giga-tronics instruments employ integrated circuit phase detectors, with external filter components and amplifiers designed to minimize the sidebands which the output pulses of the phase detector can contribute to the variable frequency.

DUAL-LOOP INDIRECT SYNTHESIS

It is desirable to phase-lock a signal generator to a highly stable reference signal, such as that produced by a crystal oscillator, in order to impart the stability of the reference to the generator's output. This can be difficult to achieve, however, when the generator covers a large range of frequencies. Giga-tronics Microwave Synthesizers operate all the way from 50 MHz to 26 GHz, and even higher with frequency extenders.

In order to produce stable, spectrally pure frequencies over this very extensive range, Giga-tronics employs a dual-loop synthesis technique. The two loops are (1) the Output Loop, which phase-locks the synthesizer output frequency to a reference microwave signal, and (2) the Reference Loop, which phase-locks the reference microwave signal mentioned above to the Master Reference. The Master Reference is a highly stable 10 MHz source built into the instrument; an external source can be easily substituted for it at the option of the user.

THE OUTPUT LOOP

The Model 1018, having a range of 50 MHz to 18 GHz, requires three fundamental YIG-Tuned Transistor Oscillators to generate its RF output. The ranges of the individual YIGs are 2-8 GHz, 8-12 GHz, and 12-18 GHz. The frequency of each oscillator is controlled by means of (1) its tuning coil and (2) its FM coil.

The tuning coil is for coarse tuning under the direct control of the system computer. The computer sends digital data to the appropriate YIG driver circuit, where a digital-to-analog converter and amplifier system turn this data into a controlled current supply to the YIG tuning coil. In this way the oscillator can be tuned to within about 50 MHz of the desired output frequency.

The FM coil is for fine tuning under the control of the Output Phase Lock Loop circuit. The Output PLL controls the current through the FM coil in order to phase-lock the YIG to the reference loop.

HOW THE OUTPUT LOOP WORKS

The computer selects the appropriate YIG for the frequency requested by the operator, and (using the tuning coil) coarse-tunes it to within about 50 MHz of the desired output. The signal produced by this YIG will, at some point in the instrument's RF path, pass through a coupler which will return a sample of it to the Reference Mixer (Mixer #1).

There will, of course, be another input to the mixer, but it is not generated in the output loop. The other input comes from the Reference Loop, and is generated by the 1.9-8.7 GHz YIG (the Reference YIG). This reference frequency is selected by the computer, according to an algorithm to be presented later in the discussion of the reference loop. To put it simply, for each output frequency that the operator can select, there is an appropriate reference frequency that differs from the output frequency by a specific amount; this difference can range from 95 MHz to 395 MHz. (For output frequencies not within the reference oscillator's 1.9-8.7 GHz range, special arrangements are made which will be discussed below.)

The IF output of the reference mixer is equal to the difference between the reference frequency and the output frequency. This difference is "known" to the system computer: that is, the reference frequency was chosen by the computer to achieve a particular difference between the two loops and therefore a particular IF out of the mixer. Because the IF is known, an appropriate divisor can be selected for the divide-by-N circuit.

The design of the output loop requires a 1MHz signal out of the divide-by-N circuit regardless of the output frequency. The divisor, with which the divide-by-N is programmed, must be such that the IF from the mixer is divided down to 1 MHz. The reason for this requirement is that the output phase lock loop works by comparing the output of the divide-by-N with a stable 1 MHz reference (obtained by dividing the 10 MHz master reference by 10). If the "N" is equal to the IF in MHz, then a 1 Mhz quotient results. For example, if there is a difference of 273 MHz between the output and reference loops, the reference mixer produces a 273 MHz IF, the computer programs the divide-by- N with a divisor of 273, and the divide-by-N furnishes a 1 MHz output to the output PLL. The output PLL then compares its two 1 MHz inputs, and makes any needed current changes to the FM coil of the output YIG in order to achieve and maintain phase lock. Note that this operation assumes the reference loop and the master reference to be stable and accurate; any needed adjustments are made to the frequency of the output YIG.

Figure 3.3

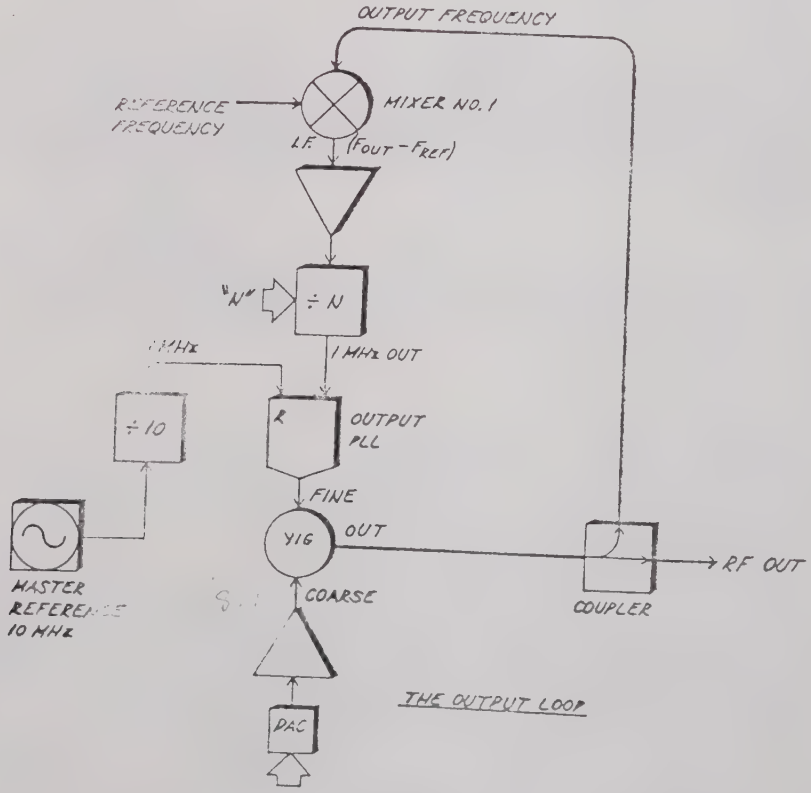

AN EXAMPLE

Suppose that the user requests a 2.000 GHz RF output, either through switch settings or remote programming. The system computer selects the 2-8 YIG and tunes it to 2 GHz, but only roughly. (The YIG could, a this point, be generating 1.987 GHz, or 2.019, or 1.975.) At the same time, the computer selects the appropriate reference frequency (in this case 1.905 GHz) and the appropriate divisor for the divide-by-N circuit (in this case 95, since there is a 95 MHz difference between the two loops).

A sample of the output frequency is furnished to the reference mixer by means of a coupler in the RF path. The other input to the mixer is the 1.905 GHz reference frequency. The mixer produces an IF equal to the difference between the reference and output frequencies. The divide-by-N circuit, as programmed by the computer, divides this IF by 95 and supplies the result to the output phase lock loop.

However, since the output oscillator is NOT tuned to precisely 2.000 GHz, the two loops will NOT be precisely 95 MHz apart, the mixer IF will NOT be precisely 95 MHz, and the result of dividing the IF by 95 will NOT be precisely 1 MHz. This is where the output phase lock loop comes into play.

Comparing the (roughly) 1 MHz signal from the divide-by-N circuit to a precise 1 MHz signal (obtained by dividing the 10 MHz master reference by 10), the output PLL determines whether the Mixer IF, and therefore the output loop (since the reference loop is assumed to be correct) is too high or too low in frequency, and sends to the output YIG's FM coil whatever correction is needed to reduce the error. In this way the output frequency can be fine-tuned to 2.000 GHz, with the result that the mixer IF becomes precisely 95 MHz, the divide-by-N (programmed with a divisor of 95) supplies a precise 1 MHz input to the output PLL, and phase lock has been achieved.

THE REFERENCE LOOP

As we have seen, the operation of the Output Loop requires a stable Reference Frequency that is relatively close to the frequency of the output (the limitations of the divide-by-N circuit demand that the difference between the two loops be no greater than 395 MHz). Therefore, the Reference Loop must accomplish the task of generating a broad range of frequencies and locking them to a single timebase.

The heart of the reference loop is the Step Recovery Diode Multiplier, which is located within the Sampling Mixer module. This circuit generates multiple harmonics of the signal that is applied to it by the 100 MHz VCXO. Even frequencies as high as 8700 MHz (the 87th harmonic) are generated at useful amplitudes; this permits mixing of the desired harmonic with the microwave signal produced by the reference oscillator.

Since these harmonics generated by the multiplier are all based on the 100 MHz VCXO, they have the same stability as the VCXO--and if the 100 MHz VCXO is phase locked to the Master Reference, these harmonics in turn acquire the stability of the Master Reference. That is what Giga-tronics has done. The 100 MHz VCXO is controlled by the 100 MHz PLL circuit, which compares the 10 MHz Master Reference to the output of the VCXO (suitably divided by ten) and sends a correction signal to the VCXO to maintain phase lock. The harmonics

generated by the multiplier thus have not only the stability and accuracy of the Master Reference, but also the superior phase-noise characteristics of the VCXO. By phase locking the Reference Loop to one of the harmonics, it is possible to impart these desirable characteristics to the reference frequency as well.

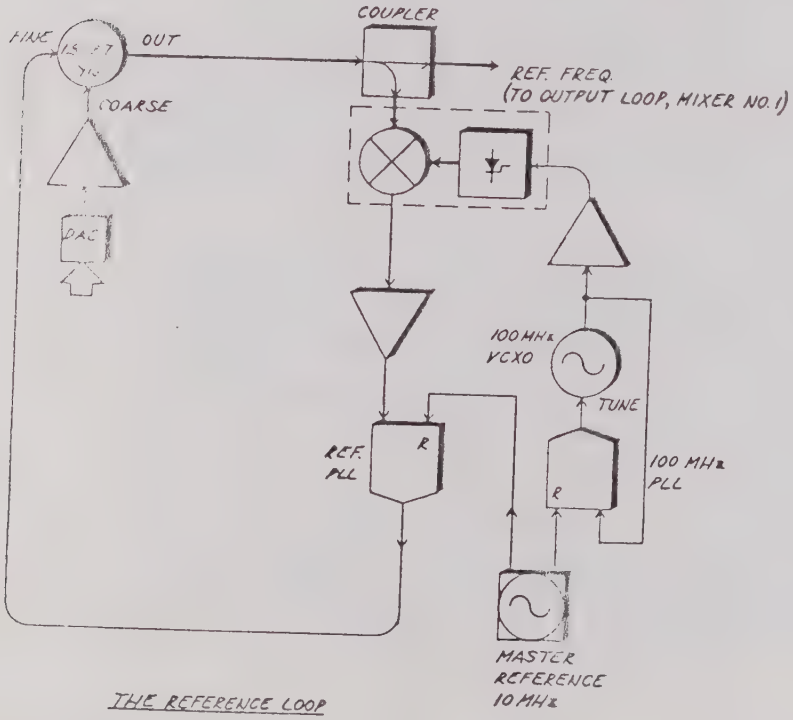

Figure 3.4

The Reference Oscillator is programmed to generate frequencies that are slightly offset from a multiple of 100 MHz. For example, a reference frequency of 2705 MHz is the 27th harmonic of 100 MHz, plus an offset of 5 MHz. The sampler would mix 2705 MHz with the 27th harmonic of 100 MHz (2700 MHz) and yield an intermediate frequency of 5 MHz. This IF (following amplification and filtering) is supplied to the reference phase lock loop, which compares the IF to the 10 MHz Master Reference (suitably divided by two) and sends to the Reference YIG's FM coil whatever correction signal is needed to maintain phase lock. As with the output YIGs, the 1.9-8.7 Reference YIG has a tuning coil for coarse tuning under the direct control of the computer, and an FM coil for fine tuning under the control of a phase lock loop circuit.

The reference loop operates in virtually the same way for other reference frequencies; the only difference between the cases of reference frequencies at 3305 and 5405 MHz is that the 33rd and 54th harmonics of 100 MHz would be used by the Sampling Mixer to produce the 5 MHz IF. In order to prevent undesired high frequencies produced in the mixer from interfering with normal

loop operation, a low pass filter is placed between the Sampling Mixer and the IF amplifier.

The amount of frequency offset (from the 100 MHz harmonic) is chosen by the computer. It is not always 5 MHz, though it very often is. This raises the question, on what basis is a reference frequency selected for the given output frequency? The algorithm for determining the reference frequency varies slightly for each of four possible frequency ranges, and is described below.

FINDING THE REFERENCE FREQUENCY

The divide-by-N ciruit can be programmed with divisors ranging from 95 to 395, or 300 different operations in total. Its quotient should always be 1 MHz, and intermediate frequencies of 95 to 395 MHz can be supplied to it, or 300 different IFs in total. For a given reference frequency, therefore, 300 output frequencies (in 1 MHz steps) can be used to create 300 IFs (in 1 MHz steps) which the output loop can phase lock to the master reference.

Reference frequencies are selected so that each covers a 300 MHz band of the output range. That is, the output can be increased by 300 MHz before the computer switches to the next reference frequency. Within these 300 MHz bands, the IF (created by the difference between the reference and output frequencies) changes with each 1 MHz step, and the computer reprograms the divide-by-N circuit to compensate for this. Here is the algorithm for determining the reference frequency when the output frequency is greater than 2.199 GHz and less than 8 GHz:

[for fOUT =
2200 to 7999]

fREF = ([INT((fOUT-100)/300)] X 300) + 5

NOTES: fREF = the reference frequency; fOUT = the output frequency; INT signifies taking the integer value of a quantity by ignoring all digits right of the decimal; all frequencies are in MHz.

EXAMPLE: fOUT = 3000 MHz

fREF = ([INT((3000-100)/300)] X 300) + 5

= ([INT 9.667 X 300)]+ 5

= (9 X 300) + 5

= 2705 MHz

This reference frequency, according to the formula, also applies to all output frequencies from 2800 to 3099 MHz. But because of rounding in computer arithmetic, the changeover to the next reference frequency tends to occur 1 MHz "late"; in practice, the range of output frequencies actually covered by the 2705 MHz reference frequency is 2801 to 3100 MHz, and the next reference frequency (3005) commences with an output selection of 3101 MHz.

Remember, the above formula applies to output frequencies in the 2200 to 7999 MHz range only. The reason this formula cannot be applied to an output

frequency of 2000 MHz is that the result would be 1805 MHz--slightly below the range of the reference oscillator. For output frequencies of 2000 to 2199 MHz, therefore, the computer arbitrarily sets an fREF of 1905 MHz and compensates for the difference in the programming of the divide-by-N circuit.

The reason the above formula cannot be applied to output frequencies above 7999 MHz is that the 8-12, 12-18 and 18-26 bands are well above the range of the reference oscillator and cannot be operated on a one-to-one basis with it. The solution: third-harmonic mixing. This simply means that the reference mixer is used to mix the output frequency with the third harmonic of the reference frequency rather than with the fundamental reference frequency. Here is the algorithm:

[for fOUT
>7999]

fREF = ([INT((fOUT-100)/300)] X 300) + 5)/3

EXAMPLE: fOUT = 11000 MHz

fREF = ([INT((11000-100/300)] X 300) + 5)/3

= ((36 X 300) + 5)/3

= 10805/3

= 3601.667

Note that the reference oscillator generates 3601.667 MHz, but that the reference mixer derives its IF (195) by mixing the third harmonic of that frequency (10805) with the 11000 MHz output frequency. Note also that in this case, the reference sampler produces an IF of 1.667 MHz (5 MHz/3) rather than 5 MHz. The computer programs the reference PLL to compensate for this difference and lock on 1.667 MHz (this is done by dividing the 10 MHz Master Reference by two and then by three, yielding a 1.667 MHz standard).

The operation of the reference loop itself is otherwise normal--the reference oscillator is coarse-tuned to 3601.667 MHz, the sampling mixer (using the 36th harmonic of 100 MHz) produces a 1.667 MHz IF, the reference PLL compares this to a timebase-derived 1.667 MHz signal and fine-tunes the reference oscillator to maintain phase lock.

The last case remaining to be discussed is that of frequencies below 2000 MHz, and this will be explained in the following treatment of the Downconverter.

THE DOWNCONVERTER

Frequencies below 2000 MHz are generated by mixing the outputs of two fundamental oscillators. The 2-8 YIG provides a fixed 8005 MHz Local Oscillator input to the downconverter mixer (mixer #2). The 8-12 YIG provides a variable RF input to the same mixer. The IF produced by the mixer (which is equal to the difference between the LO and RF inputs) is amplified and filtered in the downconverter module. There is no individual leveler/modulator for the <2 GHz band; the functions of levelling and modulation are accomplished ahead of the downconverter mixer. Leveling is

controlled through the 2-8 Leveler/Modulator and modulation is controlled through the 8-12 Leveler/Modulator. In other words, the power of the IF is varied by changing the power of one mixer input; the IF is pulse-modulated by pulse-modulating the other mixer input.

Since two output oscillators are used simultaneously, the problem arises: how can both output YIGs be phase locked when there is only one output phase lock loop? The solution: a special PLL circuit dedicated to the fixed LO. This circuit uses a sampling mixer identical to that in the reference PLL; it mixes the 8005 MHz fixed LO with the 80th harmonic of 100 MHz to produce a 5 MHz IF. This IF is supplied to the Fixed LO PLL, where it is compared to a stable 5 MHz standard (the master reference, divided by two) and a correction signal is sent to the FM coil of the 2-8 YIG to maintain phase lock. Of course, this is the same oscillator FM coil that is controlled by the Output PLL when the instrument is operating in the 2-8 band. The two inputs to the FM coil are switched by the computer; below 2 GHz, the oscillator is fine-tuned by the Fixed LO PLL, and above 2 GHz it is fine-tuned by the Output PLL.

Since the Fixed LO is provided with its own PLL circuit, the Output PLL is free for use by the RF YIG (8-12). During operation in the downconverter range, the RF YIG is controlled by the output PLL in the same way that the output YIG would be during operation in the higher frequency ranges; the only real difference is that the frequency of the output loop and the actual output frequency of the instrument are not the same.

The signal out of the RF YIG is equal to the sum of the output (downconverted) frequency and the fixed 8005 MHz LO. For example, to generate an output frequency of 500 MHz, the 8005 MHz LO is mixed with an RF of 8505 MHz. The reference frequency is arrived at by treating the RF as if it were the actual output frequency, and inserting it into the algorithm used for finding fREF at output frequencies above 7999 MHz.

[for fOUT
<2 GHz]

fREF = (([INT((RF-100)/300)] X 300) + 5)/3

where RF = fOUT + 8005

EXAMPLE: fOUT = 1900 MHz

fREF = (([INT(((1900 + 8005) - 100)/300)] X 300) + 5)/3

= (([INT(9805/300)] X 300) + 5)/3

= (([INT 32.6833] X 300) + 5)/3

= ((32 X 300) + 5)/3

= 9605/3

= 3201.667

THE RF PATH

Between the output of each YIG oscillator and the output of the instrument is a path which does much to determine the quality of that instrument. Coupling, leveling, filtering, and modulation are all accomplished in this RF path. Some power loss inevitably takes place there; Giga-tronics has cut this loss to a minimum by designing hybrid circuits which combine the above functions into single modules. This clustering of RF circuits greatly reduces the power loss inherent in designs requiring multiple transisitions and connectors. RF switching is performed by solid state devices, rather than by mechanical switches, for increased reliability.

AMPLITUDE CONTROL

The output amplitude of the instrument is controlled by a combination of fixed-step attenuation and closed-loop leveling.

The output stage of the synthesizer consists of a step attenuator which provides up to 110 dB of attenuation in 10 dB increments. Finer control of the output level is provided by the closed loop leveling system, also referred to as Automatic Leveling Control or ALC.

The heart of the leveling loop is a summing amplifier with multiple inputs, located on the A7 PC board. The output of the amplifier is used to drive the PIN diode leveler circuit in the relevant RF module. One of the inputs to this leveling amplifier consists of feedback from the level detector; this input will be discussed in more detail below. The remaining inputs to the summing amplifier are a voltage directly controlled by the RF vernier on the front panel, and a signal produced by a digital to analog converter. The binary number supplied to the DAC by the computer is derived from the position of the 1 dB step attenuation switch, and also from level correction factors stored in semiconductor memory. Since the vernier and DAC inputs are not controlled by the leveling loop, they may be thought of as a reference input, against which an opposite variable input (fed back from the detector) is to be balanced.

The level detector is a diode device which returns a negative voltage proportional to the square of detected power. The RF measured by the detector is sampled from the output path by a coupler placed ahead of the output 10 dB step attenuator. In fact, there are two internal detectors, one for frequencies below 1.5 GHz, and a second detector for the higher frequencies; the "External ALC" mode permits the user to substitute a remote detector for the internal ones. The active detector's output voltage is applied to a sampling circuit; during pulse modulation this circuit, driven by the modulation waveform, samples the detector signal only during the "on" intervals, making it possible to control both CW and pulsed RF outputs by means of the same leveling loop (a unique feature of Giga-tronics signal generators).

The sampled and amplified detector signal is processed logarithmically to give the leveling loop a response that is linear in dB. The signal path is divided between two log amplifiers, the faster but less accurate 'AC' path represented by the log amp on the A113 board, and the slower but more accurate 'DC' path represented by the log amp on the A19 board. The divided

signal is recombined and summed with a correction signal from the temperature compensation circuit (A111) and also with the amplified AM signal, if any. The resulting detector signal is then furnished to the leveling amplifier. The detector input to the leveling amplifier varies as RF power varies; the amplifier furnishes a correction signal to the leveler circuit in the RF module, adjusting the output power until the detector input cancels the other inputs to the summing junction.

When the 'LEVELED' pushbutton is activated, the RF vernier is disabled and the output power is referenced to 0 dBm (that is, the output power will be 0 dBm when no attenuation is selected, and -5 dBm when 5 dB of attenuation is selected. When enabled, the vernier furnishes an adjustable reference.

AMPLITUDE MODULATION

Amplitude modulation in Series 910 instruments is accomplished by summing the detector feedback input to the leveling loop amplifier with a modulation signal. The signal furnished to the 'AM IN' connector on the front panel is processed by a logarithmic amplifier circuit which includes calibrations for amplitude and linearity. The resulting drive signal is then combined with the detector feedback signal at the inverting input of the leveling amplifier. In this way output amplitude can be modulated at depths of 0 to 20 dB.

PULSE MODULATION

The pulse modulation system has been designed for fast ries/fall time and minimum video feedthrough of the modulating signal to the RF output. The modulation "on" and "off" pulses are applied to PIN diode switches in the RF modules; the very fast rising and falling edges are produced by a driver circuit, in response to a modulation waveform which can be generated within the instrument or received from an external source. Each instrument contains a pulse/square wave generator for use as a modulation signal source; both rate and width are variable, with a fixed rate of 1 kHz and a fixed width of 1 microsecond available (both derived from the 10 MHz timebase). For the purpose of synchronizing auxiliary instruments, a TTL level modulation output is available, whether the modulation source is internal or external.

DIGITAL FREQUENCY SWEEPING

Series 910 instruments can be swept through a given frequency range in either of two ways; it is convenient to discuss these modes separately, as digital sweep and analog sweep.

In 'digital' sweep (this mode is designated 'STEP CW' on the 910's front panel) the instrument generates a rising series of fixed frequencies. The step size and step rate are adjustable. The instrument acquires phase lock at each frequency before proceeding to the next. The sweep direction is always from lower frequency to upper frequency, resetting to the lower. A voltage proportional to progress through the sweep is available, with 0 volts at the start frequency and +10 volts at the stop frequency. A pen lift output signal is provided for controlling a recorder pen: the signal is low (a transistor to ground) during sweep reset or when the sweep is in hold. A single sweep or single step can be initiated by means of a trigger input as well as by pushbutton. The digital sweep mode is not fundamentally different from

fixed-frequency signal generation; it simply takes advantage of the computer's ability to issue a sequence of commands automatically.

ANALOG FREQUENCY SWEEPING

In this mode, which makes possible a much faster sweep, the signal generation process is significantly altered. During fixed-frequency operation, the output YIG oscillator is tuned with a fixed tuning current from the YIG driver circuit, and a variable tuning current from the output PLL. During operation in the analog sweep mode (designated 'SWEEP' on the front panel) this situation is reversed. The coarse-tuning control signal from the YIG driver consists of a ramp, and the control signal from the phase lock loop is fixed.

Each YIG driver circuit houses two multiplying digital to analog converters, one using a fixed voltage reference and one using a voltage ramp as a reference. Each DAC output is equal to the reference input, multiplied by a binary number which the computer selects (the multipliers remain fixed during the sweep). The driver output is the sum of the two DAC outputs. Normally, the second DAC has an output of zero and does not affect the frequency of the YIG oscillator. When the instrument is operated in the analog sweep mode, the second DAC is driven by an internal voltage ramp, adding an increasingly large signal to the driver output. The first DAC is tuned to the start frequency of the sweep, and is held at this value. The second DAC exists in order to add an offset value to the frequency tuned by the first DAC.

The sweep ramp applied to the second DAC starts from zero and increments to its maximum value in 1024 steps. The frequency at this maximum point (the "stop" frequency, in other words) is determined by the binary multiplier with which the second DAC is programmed. The frequency resolution of the sweep (the step size, in other words) is also determined by the multiplier; in order to insure the finest possible resolution, the full sweep ramp is always used. For narrow sweeps (those that cover less than one sixteenth of the YIG band), the gain of the ramp generator is reduced so that all 1024 steps of the sweep ramp may be included.

The sweep ramp is generated on the analog sweep PC board (A24) by a 10-bit digital to analog converter; the sweep is therefore not a true analog process. The steps are sufficiently fine, however, to make them indistinguishable when the sweep is monitored on an oscilloscope. The various ramps used in this quasi-analog sweep feature are generated digitally for superior control and versatility.

Ordinarily, the output phase lock loop acts to compensate for any change in the YIG driver tuning current, and this would interfere the analog sweep process. For this reason, the output PLL must be disabled during the sweep. At the beginning of the sweep the generator is tuned and locked to the start frequency. A sample-and-hold circuit is used to "save" the output PLL's control signal at this point, and the loop is deactivated; the PLL remains frozen at the start-frequency value, so that frequency error during the sweep will be minimized. This process causes a setup delay of about 50 milliseconds at the start of the sweep, and at the beginning of each band in a multi-band sweep (each YIG oscillator must be locked before its own portion of the sweep can commence.)

The sample-and-hold circuit uses an oscillator-driven counter to program the multiplier of a digital to analog converter. In this way, a ramp is producd, and is compared to the control signal fed back from the output PLL. When the ramp matches the PLL signal, the counter stops incrementing, the PLL is disabled, and the saved control signal is applied to the YIG's fine tuning coil.

The 'ANALOG SWEEP' output on the 910's rear panel furnishes a voltage directly proportional to frequency during the sweep. This output is generated on the A6 board, by means of a circuit very similar to the YIG drivers. Two multiplying DACs, one with a fixed reference and one with a ramp reference, are summed to produce the output signal. The ramp is the same sweep ramp generated by the A24 board and used by the YIG drivers. Because the ramp is reset at the start of each YIG band, the circuit output must be compensated in order to produce a continuous sequence; the output level for each band must begin where the previous one left off. The computer makes these band corrections through the programming of the DACs, and also through the programming of an amplifier with multiple feedback loops, which adds an offset factor appropriate to each YIG band.

The 'UNBLANK/MARKER' output on the 910's rear panel furnishes signals that may be applied to the Z-axis input of an oscilloscope. This output originates on the A24 board. A 256-bit RAM is loaded with a data table corresponding to the different points in the sweep; '1' bits represent the three frequency markers. During the sweep, the computer strobes the 256 memory locations in sequence; a '1' is read at each marker. The memory's output, together with an "unblank" control line generated by the computer, are applied to a transistor circuit which converts them into one of three output signal levels. When "unblank" is off, the output is at the blanked retrace level. When "unblank" is on, the output is at the normal level. When "unblank" is on while a marker is read, the output is at the intensified level.

SECTION FOUR

CALIBRATION AND TESTING

CALIBRATION PROCEDURE

1.0 Required Test Equipment

1.1 Frequency Standard (1,2,5 or 10 MHz)

1.2 Oscilloscope, 0.1 usec time base, min. (Tektronix Model 475 or equal)

1.3 Frequency Counter, 0.1 to 26.5 GHz

1.4 Power Meter/Sensor (HP 436A with 8485A or equal)

1.5 Detector (Wiltron 70S50B or equal)

1.6 Spectrum Analyzer (Tektronix Model 492 or equal)

1.7 Low Distortion Sine Wave Generator (Wavetek 182A or equal)

1.8 Modulation Meter (Wavetek 4101 or equal)

1.9 Distortion Analyzer (HP 333A or equal)

2.0 Master Oscillator Calibration

2.1 Turn on UUT and allow a 20 minute warmup, covers on.

2.2 Connect the 10 MHz output on the rear panel or the UUT to the oscilloscope vertical input, adjust oscilloscope for a mid to full scale display at .1 microsec/cm timebase setting.

2.3 Connect the output from the frequency standard (1,2,5,10 MHz) to the oscilloscope external trigger input and adjust the oscilloscope to trigger on this signal.

2.4 Remove the UUT top cover and adjust the master oscillator frequency adjust (located under a screw-in cap) until the scope display stands still. Use the X10 expander for more resolution.

2.5 Replace the screw-in cap on the oscillator.

3.0 100 MHz Phase Lock Loop Adjustment

3.1 Turn on the UUT and allow a 20 minute warmup, both covers off.

3.2 Monitor the (A8) 100 MHz PLL test point with the oscilloscope (DC coupled IV/CM).

3.3 Using a non-metallic tuning tool (or one which has only a small metal tip) adjust the trimmer capacitor on the 100 MHz oscillator module for an oscilloscope reading of 3.5 $\pm$ .25 V. This adjustment is accessible through a hole in the module cover on the bottom side of the UUT.

4.0 Reference Oscillator Tracking

4.1 Turn on the UUT and allow a 20 minute warmup, covers off.

4.2 Connect the frequency counter to the test port, TJ1, on the reference coupler.

4.3 Connect the oscilloscope to the test point on the (A16) reference PLL. (DC coupled 1v/cm, GND @ center).

4.4 Select CW mode, no modulation.

4.5 Set the Start-CW switches to 2.005 GHz (See Note).

4.6 Adjust the "MIN" pot (R3) on A13, 1.9-8.7 YIG driver, for 0 $\pm$ .25V on the oscilloscope with the frequency at 1.905 GHz (on the counter).

4.7 Set the Start-CW switches to 7.005 GHz (See Note).

4.8 Adjust the "MAX" pot (R4) on A13, 1.9-8.7 YIG driver, for 0 $\pm$ .25V on the oscilloscope with the frequency at 6.905 GHz (on the counter).

4.9 Repeat 4.5 to 4.8 as required.

Note: If the Series 910 instrument being calibrated does not contain the 2 to 8 GHz band, then substitute the following frequency pairs, depending on the minimum and maximum capability of the Model 900.

For 2.005 and 1.905 in steps 4.5 - 4.6 use the lowest of:

8.005 and 2.601667
12.005 and 3.901667
18.005 and 5.901667

For 7.005 and 6.905 in steps 4.7 - 4.8 use the highest of:

11.005 and 3.601667
17.005 and 5.601667
26.005 and 8.601667

5.0 Output Oscillator Tracking

The following procedure covers all four possible output oscillators found in the Series 910. If the instrument being calibrated does not contain all four bands, ignore the steps in para. 5.4 which do not apply.

5.1 Turn on UUT, select auto sweep, 10 MHz steps, midrange rate, start at minimum output frequency, stop at maximum output frequency. Allow a 20 minute warmup, covers off.

5.2 Set output for 0 dBm and connect the frequency counter to the front panel RF output.

5.3 Connect the oscilloscope to the A9, Output PLL, test point (DC coupled, 1V/cm, GND @ center).

5.4 Select CW mode and guided by the following table adjust each of the four output oscillators such that the test point voltage is 0 $\pm$ .5V with the counter reading the selected frequency to 1 MHz resolution.

STEP	FREQUENCY	ADJUSTMENT
1	2.000	(A11) MIN (R3)
2	7.900	(A11) MAX (R4)
3	REPEAT 1 & 2 As Required	
4	8.000	(A14) MIN (R3)
5	11.900	(A14) MAX (R4)
6	REPEAT 4 & 5 As Required	

7	12.000	(A12) MIN (R3)
8	17.900	(A12) MAX (R4)
9	REPEAT 7 & 8 As Required	
10	18.000	(A10) MIN (R3)
11	26.500	(A10) MAX (R4)
12	REPEAT 10 & 11 As Required	

5.5 Starting at the minimum output frequency, increment the frequency in 100 MHz steps, monitoring the A9 test point. Within each of the above bands, readjust the appropriate controls, if necessary, to maintain the voltage within 2V of ground.

6.0 RF Output Amlitude Calibration - CW

6.1 Turn on UUT and allow a 20 minute warmup, covers on.

6.2 Connect the power meter sensor to the RF output connector and set both attenuator switches to 0.

6.3 Enable the vernier and turn it fully clockwise.

6.4 Find a frequency in the 2-4 GHz band where an output in excess of +10 dBm can be obtained (See note 1). If not possible, pick the next lower 1 dB increment.

6.5 Adjust the vernier knob until the power meter reads +10 dBm (or +9, etc.).

6.6 With the vernier disabled, set the 1 dB attenuator to -9. Adjust "-10 dB" (R30) on A7 for a power display reading of -9 dBm. Adjust "CW OS" (R15) on A19 for a power meter reading of -9 dBm $\pm$ .2 dB. Repeat if necessary.

6.7 Set the 1 dB attenuator to 0. Adjust "0 dB" (R29) on A7 for a power display reading of 0 dBm. Adjust "LG GN" (R28) on A19 for a power meter reading of 0 dBm $\pm$ .2 dB. Repeat if necessary.

6.8 Set the vernier enable on and adjust the vernier for a power display reading of +10 dBm (+9, etc.). The level light must be on. Adjust "CW GN" (R25) on A19 for a power meter reading of +10 dBm $\pm$ .2 dB. The level light must be on.

6.9 Repeat 6.6 through 6.8 as required.

6.10 Recheck the actual power output vs. the power display at -9, 0, +5 and +10. At -9 dBm the tolerance is $\pm$ .2 dB; at 0 dBm, $\pm$ .2; at +5 dBm, $\pm$ .3 and at +10 dBm, $\pm$ .3. Readjust the appropriate controls as required (see 6.6 through 6.8) (See note 2).

6.11 Set the frequency to 500 MHz, both attenuators to 0, vernier off.

6.12 Adjust "C GN" (R11) on A18 for a power meter reading of 0 dBm.

6.13 Set the 1 dB attenuator to -9 dB and adjust "C OS" (R24) on A19 for a power meter reading of -9 dBm.

6.14 Repeat 6.11 through 6.13 as required.

6.15 Starting at .1 GHz, with the amplitude set to 0 dBm, increment the frequency in 100 MHz steps up to 1.9 GHz. Verify that the power meter reading maintains 0 + 1 dB. If needed, readjust "C GN" (R11) on A18 and "C OS" (R24) on A19 to achieve this tolerance from .1 to 1.4 GHz. From 1.5 to 1.9 GHz, the three adjustments described in 6.6 through 6.8 must be used to correct the calibration. These three adjustments also affect all frequencies above 2 GHz.

Note 1: If the instrument being calibrated does not contain the 2 to 8 GHz band, find a high power point near the minimum output frequency and use it.

Note 2: If the instrument being calibrated does not contain the down-converter (50 MHz to 2 GHz), ignore paras. 6.11 through 6.15.

7.0 RF Output Amplitude Calibration - Pulse

7.1 Turn on UUT and allow a 20 minute warmup, covers on. Be sure that the CW calibration has been done.

7.2 Connect the detector to the RF output connector. Connect the detector output to the DC coupled oscilloscope input.

7.3 Set the frequency to 2 GHz, CW mode, leveling on, both attenuators to 0, modulation off (See note 1). Set the ground reference on the scope at the top of the screen. Use about 50 mV/Div sensitivity.

7.4 Note the amplitude produced by the detector at this 0 dBm level. Now change the 1 dB attenuator to -9 dBm and again note the amplitude.

7.5 Set the modulation rate midrange, X10 on. Select squarewave mode and adjust "PL OS" (R6) on A19 for the same amplitude as in CW at -9 dBm.

7.6 Change the 1 dB attenuator to 0 dBm and adjust "PL GN" (R1) on A19 for the same amplitude as in CW at 0 dBm.

7.7 Repeat 7.5 and 7.6 as needed. (See note 2)

7.8 Select a frequency of 500 MHz. Again calibrate the oscilloscope as in 7.4.

7.9 Adjust "P OS" (R27) on A19 for calibration at -9 dBm.

7.10 Adjust "P GN" (R12) on A18 for calibration at 0 dBm.

7.11 Repeat 7.9 and 7.10 as needed.

Note 1: If the instrument being calibrated does not contain the 2-8 GHz band, use the minimum output frequency.

Note 2: If the instrument being calibrated does not contain the down-converter (50 MHz to 2 GHz), ignore paras. 7.9 through 7.11.

9.0 Output Phase Lock Loop Balance

9.1 Select 2 GHz and 0 dBm out. Connect the analyzer to the RF output. (See note 1)

9.2 Tune the analyzer to 2 GHz, using 1 MHz/Div scanwidth. (See note 1)

9.3 Adjust the balance pot (R13) on A9 for minimum 1 MHz sidebands.

Note 1: If the instrument being calibrated does not contain the 2 to 8 GHz band, use the minimum output frequency.

10.0 AM Calibration (Series 910 instruments to 18 GHz)

10.1 Set the sine wave generator frequency to 1 kHz at 1 V peak to peak into a 50 load. Connect the output of the sine wave generator to the AM input of the UUT. Leave the 50 load connected.

10.2 Set the UUT to 5 GHz at 0 dBm out. The mode should be set to "CW". The modulation should be set to "AM". Connect the output of the UUT to the input of the spectrum analyzer. Note: If 5 GHz is not available in the instrument being calibrated, use the lowest of the following frequencies which is available: 10, 15 or 18.

10.3 Adjust the spectrum analyzer to 5 GHz (or 10, 15, 18). Once the UUT output signal has been found adjust the frequency Span/Div control to zero span. Connect the 10 MHz IF output of the spectrum analyzer to the RF input of the modulation meter.

10.4 On the modulation meter push the + AM function button, the 100%/kHz range button, the 25 Hz filter, and the OFF De-emphasis buttons. Connect the AF output of the modulation meter to the input of the distortion analyzer.

10.5 Set the following controls on the distortion analyzer. Set the function switch to the set level position. The meter range switch to the set level position. The mode switch to automatic. The frequency range to +100. The frequency dial to 10.

10.6 AM Calibration Adjustment

10.6.1 All adjustments are on on the AM modulator board, A113.

10.6.2 Turn the "AM CAL" pot (R2) fully clockwise.

10.6.3 Turn the "AM LIN" pot (R26) fully counter clockwise.

10.6.4 Adjust the "AM CAL" pot (R2) for a 50% AM indication on the modulation meter.

10.6.5 Monitor the input signal into the distortion analyzer with an oscilloscope. Check that the sine wave is not clipping. If it is repair the AM modulator board.

10.6.6 Set the UUT 1 dB attenuator to -9 dBm adjust the "DET OS" (R1) to keep the modulation at 50%. Alternate with the "AM CAL" pot at 0 dBm, making sure to always have 50% modulation.

10.6.7 Check the % AM at all attenuator settings between 0 and -9 dBm. The % AM should be between 40% and 60%.

10.6.8 If the instrument contains a downconverter (50 MHz to 2 GHz) with UUT set to 0 dBm check % AM at various frequencies between 50 MHz and 2.0 GHz.

10.7 AM Distortion Procedure

10.7.1 At the following frequencies if they are available; 1, 5, 10, 15 and 18 GHz, the AM distortion should be less than 10% at 82% modulation.

10.7.2 Set the spectrum analyzer to the UUT output frequency, and set the Freq Span/Div to zero span. Adjust the sine wave generator amplitude to obtain an 82% AM reading on the modulation meter.

10.7.3 Adjust the sensitivity vernier on the distortion analyzer for a maximum meter indication.

10.7.4 On the distortion analyzer set the function switch to the distortion position. As the meter indication goes down turn the meter range switch counter clockwise. When the meter stops moving record the % distortion. Repeat section 10.7 for each frequency.

REQUIRED TEST EQUIPMENT

0.1 Frequency Counter - .1 to 26.5 GHz - time base accuracy better than 1 part in 10^7. IEEE-488 interface.

0.2 Computer/Controller - Any IEEE-488 interface equipped unit such as HP9825, HP85, PET 2001.

0.3 Power Meter/Sensor HP436A with 8485A.

0.4 Spectrum Analyzer: Tektronix 492 or equal, with external mixers A/R.

0.5 Oscilloscope: Tektronix 475 or equal.

0.6 Detector: Wiltron 70S50B or equal.

0.7 50 ohm Termination: Tektronix 011-0049-01 or equal.

0.8 Pulse Generator - .1 to 10 us width; 100 Hz to 50 kHz rate; 15 ns rise/fall.

0.9 Synthesized RF source - .1 to 26.5 GHz: Giga-tronics 1026 or equal.

1.0 INITIALIZATION

1.1 Install test covers on UUT and connect to power source.

1.2 Set Controls as follows:

1.2.1	Modulation:	Off
1.2.2	Mode:	Sweep
1.2.3	Sweep:	Auto
1.2.4	Step Size:	10 MHz
1.2.5	Sweep Rate:	Mid Range
1.2.6	Attenuators:	Both at "0"
1.2.7	Levelling:	On
1.2.8	Power Meter:	Internal
1.2.9	(Rear Panel) ALC Enable:	Off
1.2.10	Start Frequency:	Minimum available frequency
1.2.11	Stop Frequency:	Maximum available frequency
1.2.12	Other Controls:	Not Important

1.3 Turn on main power switch and allow UUT to warm up for at least 20 minutes.

2.0 FREQUENCY RANGE, ACCURACY AND STABILITY

2.1 Frequency Range Tests

2.1.1 Set controls as follows:

2.1.1.1	Modulation:	Off
2.1.1.2	Mode:	CW
2.1.1.3	Attenuators:	Both at "0"
2.1.1.4	Levelling:	On
2.1.1.5	Power Meter:	Internal (if option 09 is installed)
2.1.1.6	(Rear Panel) ALC Enable:	Off
2.1.1.7	Other Controls:	Not Important

2.1.2 Connect the frequency counter to the UUT RF output connector.

2.1.3 Vary the Start Freq selector switches over the entire range of the instrument. At any setting the lock and level indicators should be on and the counter should indicate the selected frequency to the required accuracy. A minimum of 20 frequencies shall be checked at a minimum spacing of 1 GHz.

2.2 Frequency Accuracy and Resolution

2.2.1 Set the Start Freq selector switches to 10.000 GHz. Record the counter reading. (If the instrument being checked does not contain the 8 to 12 GHz band, set to a frequency mid-range of the bands available and complete the following checks as applicable.)

2.2.2 Vary the 1 MHz selector switch of the Start Freq switches from 0 to 9. Verify that the counter changes accordingly. Return the switch to 0.

2.2.3 Vary the 10 MHz selector switch of the Start Freq switches from 0 to 9. Verify that the counter changes accordingly. Return the switch to 0.

2.2.4 Vary the 100 MHz selector switch of the Start Freq switches from 0 to 9. Verify that the counter changes accordingly. Return the switch to 0.

2.2.5 Vary the 1 GHz selector switch of the Start Freq switches from 0 to 9. Verify that the counter changes accordingly. Return the switch to 1.

2.2.6 Vary the 10 GHz selector switch of the Start Freq switches from 0 to 2. Verify that the counter changes accordingly.

2.2.7 (Option 03) Vary each of the three leftmost digits of the Stop Freq switches from 0 to 9. Verify that the counter changes accordingly.

3.0 R.F. OUTPUT CHARACTERISTICS

3.1 Maximum Output Amplitude

3.1.1 Set controls as follows:

3.1.1.1 Modulation: Off

3.1.1.2 Mode: CW

3.1.1.3 Attenuators: Both at "0"

3.1.1.4 Levelling: Off

3.1.1.5 Level Vernier: Maximum (CW)

3.1.1.6 Power Meter: Internal (if option 09 is installed)

3.1.1.7 (Rear Panel)
ALC Enable: Off

3.1.1.8 Other Controls: Not Important

3.1.2 Connect power meter sensor to UUT RF output.

3.1.3 Set the Start Freq switches for an output at minimum available frequency.

3.1.4 Vary the frequency in .1 GHz steps up to maximum available frequency and verify that the minimum output is as required. Note: apply correction factor for sensor as appropriate.

3.2 Output Power Accuracy

3.2.1 Set controls as follows:

3.2.1.1 Modulation: Off

3.2.1.2 Mode: CW

3.2.1.3 Attenuators: Both at "0"

3.2.1.4 Levelling: On

3.2.1.5 Power Meter: Internal (if option 09 is installed)

3.2.1.6 (Rear Panel)
ALC Enable: Off

3.2.1.7 Other Controls: Not Important

3.2.2 Connect Power Meter Sensor to UUT RF output.

3.2.3 Set the Start Freq switches for an output at minimum available frequency.

3.2.4 Vary the frequency in .1 GHz steps up to maximum available frequency and verify that the output amplitude is to the required accuracy.

Note: apply correction factor for sensor as appropriate.

3.3 Spectral Purity

3.3.1 Set controls as follows:

3.3.1.1 Modulation: Off

3.3.1.2 Mode: CW

3.3.1.3 Attenuators: Both at "0"

3.3.1.4 Levelling: On

3.3.1.5 Power Meter: Internal (if option 09 is installed)

3.3.1.6 (Rear Panel)
ALC Enable: Off

3.3.1.7 Other Controls: Not Important

3.3.2 Harmonics - Note: Perform 3.3.2, 3.3.3 and 3.3.4 simultaneously. The frequencies to be checked are listed on data sheet.

3.3.2.1 For each selected frequency, select the harmonic to be checked and temporarily set the UUT Start Freq switches to its frequency.

3.3.2.2 Tune the analyzer to this frequency and establish a reference level. Use a sufficiently narrow I.F. bandwidth to permit 60 dB dynamic range without fundamental overload.

3.3.2.3 Without changing any analyzer settings, set the UUT Start Freq switches to the fundamental frequency.

3.3.2.4 Measure the resultant harmonic amplitude.

NOTES:
1) In the Range up to 1.8 GHz, the analyzer R.F. attenuator must be set to at least 30 dB to avoid generating harmonics in the analyzer itself.

2) For fundamental frequencies over 13 GHz, it is necessary to carefully evaluate analyzer calibration as no calibrating signal is available from the UUT.

3.3.3 Spurious - Note: Perform with 3.3.2

3.3.3.1 For each selected frequency, tune the analyzer to center the signal on the display.

3.3.3.2 Starting at a span of 100 MHz/div, reduce the span to 5 kHz/div while maintaining an appropriate bandwidth and filter to allow a 60 dB dynamic range.

3.3.3.3 Observe the amplitude of any spurious signals.

3.3.4 Residual FM/Phase noise - Note: Perform with 3.3.2

3.3.4.1 For each selected frequency, tune the analyzer to center the signal on the display.

3.3.4.2 Set the analyzer controls for 10 kHz/div span, 1 kHz BW, wide video filter, minimum noise, with the signal at the 0 dB reference line.

3.3.4.3 Observe the amplitude of the signal presentation at an offset of 10 kHz.

4.0 MODULATION CHARACTERISTICS

The frequencies to be checked are listed on the data sheet.

4.1 Set controls as follows:

4.1.1	Modulation:	Pulse
4.1.2	Mode:	CW
4.1.3	Attenuators:	Both at "0"
4.1.4	Levelling:	On
4.1.5	Power Meter:	Internal (if option 09 is installed)
4.1.6	(Rear Panel) ALC Enable:	Off
4.1.7	Preset 1 us:	Off
4.1.8	X10:	On
4.1.9	Preset 1 kHz:	Off
4.1.10	Pulse Rate:	5 kHz
4.1.11	Pulse Width:	10 usec
4.1.12	Other Controls:	Not Important

4.2 Pulse Shape

4.2.1 Connect the detector to the UUT RF output. Terminate the detector output in 50 ohms at the oscilloscope input. Connect the oscilloscope exernal trigger input to the UUT MOD SYNC OUT.

4.2.2 For each selected frequency, adjust the oscilloscope to position the detected pulse in alignment with the two dashed lines running horizontally across the CRT.

4.2.3 Now increase the time base speed to 20 NS/CM and measure the rise and fall time between the 10% and 90% points as

shown on the CRT. Use the +/- trigger slope to shift edges.

4.2.4 Observe the pulse and note any overshoot, etc. The 1 dB step attenuator may be used to verify the amount of any abberations.

4.3 Pulse On/Off Ratio

The frequencies to be checked are listed on the data sheet.

4.3.1 Change the following control settings:

4.3.1.1 Modulation: Squarewave (⎍⎍⎍)

4.3.1.2 X10: Off

4.3.1.3 Pulse Rate: Midrange

4.3.2 Connect the UUT RF output to the spectrum analyzer.

4.3.3 For each selected frequency, center the signal on analyzer and adjust the span control for zero. Now adjust the sweep speed and trigger to display the recovered pulse. Verify proper on/off ratio (the peak-to-peak waveform height.

Note: Be certain analyzer has a sufficient signal to noise ratio to be able to see the dynamic range. Use 100 kHz BW for best results.

4.4 Modulation Level Tests

4.4.1 Change the following control settings:

4.4.1.1 X10: On

4.4.2 Connect the detector to the UUT RF Output. Connect the unterminated detector output to the oscilloscope input.

4.4.3 Set the UUT to 3 GHz (See note), temporarily select modulation off and establish reference levels on the scope display for outputs of 0 dBm and -9 dBm. Adjust the scope gain to give levels about 1 division from the top and bottom. Note: If the instrument being checked does not contain the 2 to 8 GHz band, use a frequency within the bands that are available.

4.4.4 Select squarewave and verify that the peak power (negative excursion) of the pulse is within ± .5 dB of the CW reference levels at 0 and -9 dBm. Use the 1 dB attenuator to determine the difference.

4.4.5 If the instrument contains a downconverter (.05 to 2 GHz), set the UUT to 1 GHz and repeat 4.4.3 and 4.4.4.

4.5 Modulation Function Tests

4.5.1 Using a 50 ohm termination at the counter, connect the mod sync output to the frequency counter low frequency input.

4.5.2 Select squarewave (⎍⎍⎍) modulation, set X10 off, 1 kHz preset off. Verify that the squarewave frequency can be varied from a minimum of 100 Hz to about 5 kHz.

4.5.3 Set X10 on and verify that the upper frequency is at least 50 kHz.

4.5.4 Set the 1 kHz preset on and verify that the squarewave frequency is 1 kHz.

4.5.5 Connect the sync output, terminated in 50 ohms to the oscilloscope input.

4.5.6 Select pulse (⎍⎍⎍) modulation, set the X10 on and pulse rate to 5 K. Verify that, using the pulse width control the pulse can be varied from a minimum of .1 usec to at least 10 usec.

4.5.7 Set the 1 usec preset on and verify the pulse width is 1 usec, ± 10%.

4.5.8 Select first EXT⎍ then EXT⎍ and, using a pulse generator, verify the operation of the external pulse input.

4.6 Amplitude Modulation Test (except units with 18-26 GHz band)

4.6.1 Set controls as follows:

4.6.1.1 Modulation: AM

4.6.1.2 Attenuators: "0"

4.6 Amplitude Modulation Test (continued)

4.6.1.3 Levelling: ON

4.6.1.4 Power Meter: Internal

4.6.1.5 (Rear Panel) ALC Enable: OFF

4.6.1.6 Other Controls: Not applicable

4.6.2 Connect the RF output to the spectrum analyzer.

4.6.3 Connect the 10 MHz IF output from the spectrum analyzer to the input of the modulation meter.

4.6.4 Connect the output of a low distortion sine wave generator to the AM input of the UUT.

Set the amplitude to 0.5 V, P:P
Set the frequency to 1 kHz

4.6.5 For each selected frequency, center the signal on the analyzer and adjust the span control for zero.

The % modulation and distortion may now be read from the modulation meter. (20 dB depth equals 82%)

5.0 SWEEP CHARACTERISTICS

5.1 Set controls as follows:

5.1.1	Modulation:	Off
5.1.2	Mode:	Sweep
5.1.3	Attenuators:	Both at "0"
5.1.4	Levelling:	On
5.1.5	Power Meter:	Internal (If option 09 is installed)
5.1.6	(Rear Panel) ALC Enable:	Off
5.1.7	Start Freq:	Minimum available frequency
5.1.8	Stop Freq:	Maximum available frequency
5.1.9	Sweep:	Auto
5.1.10	Sweep Rate:	Mid Range
5.1.11	Sweep Increment:	10 MHz
5.1.12	Other Controls:	Not important

5.2 Connect the UUT RF output to the frequency counter.

5.3 Observe that both the UUT frequency display and the counter increment, repeatedly, from minimum to maximum frequency.

5.4 Change the increment to first 100 MHz, then 1 MHz and verify proper operation.

Note: Sweep rate may be slowed to ease viewing.

Return increment to 10 MHz and rate to mid range.

5.5 Connect the power meter sensor to the UUT RF output. Verify that (except at band crossovers) the output maintains the required accuracy.

Note: Sweeprate may be varied as required to ease viewing.

5.6 Connect the UUT SWEEP OUT to the oscilloscope input. Select the Auto Sweep mode. Verify that the ramp voltage is 0 to 10V, ± 10%.

5.7 Select Single Sweep. Push Reset. Verify that the UUT sweeps once and resets.

5.8 Select Single Step. Verify that each time the button is depressed, the frequency and ramp both increment. Return to Auto Sweep.

5.9 Monitor the rear panel pen lift connector with the oscilloscope. Verify a logic low signal during sweep retrace.

6.0 POWER METER CHARACTERISTICS

6.1 Set controls as follows:

6.1.1	Modulation:	Off
6.1.2	Mode:	CW
6.1.3	Attenuators:	Both at "0"
6.1.4	Levelling:	On
6.1.5	Power Meter:	Internal (if option 09 is installed)
6.1.6	(Rear Panel) ALC Enable:	Off
6.1.7	Start Freq:	2 GHz (If instrument does not contain the 2 to 8 GHz band, use lowest available frequency.)
6.1.8	Other Controls:	Not Important

6.2 Internal Operation

6.2.1 Connect the power meter sensor to the UUT RF output. Verify that the output is 0 dBm ± 1 dB, and the power display is 0.0 ± .1 dB.

6.2.2 Set the 1 dB step attenuator to 9. Verify that the output is -9 dBm ± 1 dB, and that the power display is -9.0 ± .2 dB.

6.2.3 Return the attenuator to 0. Turn off the levelling and

adjust the level vernier for a power display reading of +5 dBm. Verify that the output is +5 dBm ± 1 dB. Turn the levelling on.

6.2.4 Monitor the UUT RF output with the spectrum analyzer and use the 10 dB step attenuator to reduce the output in 10 dB steps. Verify that the power display and analyzer decrement by 10 dB for each 10 dB change from 10 to 90 dB. Return attenuator to 0 dB.

6.3 External Operation (if option 09 is installed)

6.3.1 Locate an output frequency between 2 & 3 GHz (see note) where, with the levelling off and vernier adjusted, an output of +10 dBm is achieved with the level indicator on. NOTE: If the instrument being checked does not contain the 2 to 8 GHz band, select a frequency near the low end of the bands that are available.

6.3.2 Connect a low loss jumper cable from the UUT RF output to the power meter input.

6.3.3 Select EXT power meter and verify that the power display reads +10 dBm ± 1 dB.

6.3.4 Insert 10 dB of attenuation with the 10 dB step attenuator. Verify that the power display reads 0 dBm ± 1 dB.

6.3.5 Insert a total of 20 dB of attenuation as before. Verify that the power display reads - 10 dBm ± 1 dB.

6.3.6 Insert a total of 30 dB, as before. Verify that the power display reads - 20 dBm ± 2 dB.

6.3.7 Insert a total of 40 dB, as before. Verify that the power display reads - 30 dBm ± 2 dB.

7.0 OTHER FUNCTIONS

7.1 Set controls as follows:

7.1.1	Modulation:	Off
7.1.2	Mode:	CW
7.1.3	Attenuators:	Both at "0"
7.1.4	Levelling	On
7.1.5	Power Meter:	Internal (if option 09 is installed)

7.1.6 Start Freq: 2 GHz (if instrument does not contain the 2 to 8 GHz band, use lowest available frequency).

7.1.7 (Rear Panel) ALC Enable: Off

7.1.8 Other Controls: Not Important

7.3 Reference Output

7.3.1 Monitor the INT CLK OUT with a 50 ohm terminated oscilloscope. Verify the amplitude is at least 2VPP and that the duty cycle is between 20% and 80%.

7.4 External 5-6 MHz input

7.4.1 Connect the frequency counter to the UUT RF output.

7.4.2 Connect a coax cable from the INT CLK OUT to the PLL REF IN.

7.4.3 Verify that the UUT output frequency increases by 5 MHz.

7.5 External ALC

7.5.1 Connect a directional coupler to the UUT RF Output with the coupler through port terminated with the power meter sensor and the detector connected to the coupled port.

7.5.2 Connect the detector output to the EXT ALC INPUT.

7.5.3 Place the EXT ALC ENABLE switch in the on (up) position and verify that adjusting the gain and offset controls will cause the power meter reading to change.

7.5.4 Return the EXT ALC ENABLE switch to off (down).

7.6 Cable Calibration (if option 09 is installed)

7.6.1 Connect a coax cable from the UUT RF Output to the Power Meter Input.

7.6.2 Perform the cable calibration.

7.6.3 Select EXT Power Meter and verify proper operation.

7.6.4 Deselect the calibration and verify proper operation in both EXT and △P power meter modes.

7.7 △P Mode (if option 09 is installed)

7.7.1 Select △P Mode and verify proper operation.

7.9 External Power Meter Analog Out. (if option 09 is installed)

7.8.1 Connect the UUT Ext Power Meter Out (rear panel) to the oscilloscope.

7.9.2 Verify that the voltage changes from approximately +10V to -10V when the UUT output power is changed from +10 dBm to -30 dBm.

SECTION FIVE

MAINTENANCE

5.0 ROUTINE MAINTENANCE

Under normal operation, this instrument requires little regular maintenance. It is recommended that the following items be checked and/or adjusted at six month intervals to insure operational accuracy (using the calibration procedures described in Section 4 of this manual):

1 -- 10 MHz master reference

2 -- output amplitude (CW and pulse)

3 -- YIG driver calibration

4 -- 100 MHz oscillator calibration

Items 3 and 4 above should also be checked whenever the instrument is slow to lock or will not lock.

The air inlet screen should be cleaned whenever significant dirt has accumulated.

5.1 TROUBLESHOOTING -- Introduction

During the warranty period of the instrument, it is recommended that no user initiated service work be performed without first contacting the factory (or our authorized representative). Often the problem can be readily isolated to a particular plug-in module, for which a replacement can be sent.

C A U T I O N

This instrument contains many MOS and CMOS devices; be sure to use appropriate anti-static procedures whenever it is necessary to handle them.

The larger integrated circuits are plugged into locking sockets. To release the locking mechanism, insert a small screwdriver in the slot at the "pin 1" end of the socket. Press down gently and tilt the screwdriver toward the socket. The IC may now be removed easily. To insert, just press the IC firmly into place, making certain all pins are straight and centered in their guides.

Never remove an IC from its socket unnecessarily.

W A R N I N G

UNPLUG THE INSTRUMENT BEFORE SERVICING! There is no switch in the power line of this instrument. Whenever it is plugged in, all primary and secondary voltages, and some rectified voltages, are present.

It may become necessary to work on the interior of the instrument while it is plugged in and power is on; circuit boards may be placed on extender cards for the purpose of observing their operation within the system. However, circuit boards and other electronic devices must not be inserted into or removed from the instrument while power is being applied to it! ALWAYS UNPLUG THE INSTRUMENT BEFORE MAKING SUCH CHANGES.

5.2 TROUBLESHOOTING PROCEDURE

Before any other analysis is attempted, three potential problem areas must be eliminated. First, be sure that all front AND rear panel controls are properly set; operational problems are often caused by leaving the External ALC switch in the wrong position, or selecting external modulation without furnishing the needed modulation signal. Second, establish whether the problem exists only under remote control; if so, the cause could be a malfunctioning controller or an improper bus address. Third, clean the plated edges of the plug-in circuit boards with a rubber eraser and alcohol (malfunctions are often caused by an accumulation of dirt on these edges).

It is usually helpful to establish what portion of the instrument's frequency range is affected; if the problem exists only for certain frequencies, the cause may be isolated to a particular YIG oscillator or driver, a particular RF module, or a particular detector. The following table categorizes the output frequencies in a Series 910 generator having the maximum range (all frequencies are in MHz):

50-1999 -- range of downconverter
- 50-74 (1st downconverter band)
- 75-111 (2nd band)
- 112-169 (3rd band)
- 170-254 (4th band)
- 255-384 (5th band)
- 385-579 (6th band)
- 580-879 (7th band)
- 880-1324 (8th band)
- 1325-1999 (9th band)

50-1499 -- range of detector no. 1
1500-26500 -- range of detector no. 2

2000-7999 -- range of 2-8 YIG oscillator (driver circuit: A11)
- 2000-3199 ('LO' band of 2-8 RF module)
- 3200-5299 ('MID' band of 2-8 RF module)
- 5300-7999 ('HI' band of 2-8 RF module)

8000-11999 -- range of 8-12 YIG oscillator (driver circuit: A14)
12000-17999 -- range of 12-18 YIG oscillator (driver circuit: A12)
18000-26500 -- range of 18-26 YIG oscillator (driver circuit: A10)

If the instrument is malfunctioning, the following procedure may be used to isolate the problem and identify the probable cause (it is here assumed that the preliminary steps described above have already been taken). Ten major areas of potential failure are discussed:

- 5.2.1 -- Instrument does not function; displays are blank or erratic.
- 5.2.2 -- No measurable output power.
- 5.2.3 -- RF output is at the wrong power level.
- 5.2.4 -- RF output frequency is unlocked.
- 5.2.5 -- RF output frequency is locked, but at the wrong frequency.
- 5.2.6 -- Front panel control malfunction (general).
- 5.2.7 -- Analog sweep malfunction.

5.2.8 -- Pulse modulation malfunction.
5.2.9 -- Amplitude modulation malfunction.
5.2.10 -- IEEE-488 interface malfunction.

Each problem area is analyzed with reference to the troubleshooting notes included in section 5.3 (e.g., "see note 8").

Refer to 5.2.10 (IEEE-488 interface malfunction) for any problem which occurs only while the instrument is under remote control.

5.2.1 GENERAL FAILURE

Symptoms: The instrument does not respond appropriately to commands given via the front panel controls or IEEE-488 interface; the front panel displays are blank, erratic, or fixed in one state.

RECOMMENDATIONS:

Check power supply (see note 1).

Check computer (see note 2).

5.2.2 LOSS OF RF OUTPUT

Symptoms: No measurable power is present at the output connector, regardless of the RF level set by the operator. The front panel 'LEVEL' indicator may or may not be lit.

RECOMMENDATIONS:

Check power supply (see note 1).

Check 10 dB step attenuator (see note 3).

Check modulators (see note 4).

Check YIG oscillators (see note 5).

5.2.3 INCORRECT OUTPUT LEVEL

Symptoms: Output power is at a level other than that selected by the RF level setting. The front panel 'LEVEL' indicator may or may not be lit.

RECOMMENDATIONS:

Before proceeding, be sure that the requested RF level is within the capability of the instrument. Although the instrument must meet a maximum power specification, the actual maximum will be somewhat in excess of this, and will vary for different frequencies. When the RF vernier on the front panel is set to 'MAX', the level capability of the

instrument may be exceeded and the level light may go out.

Check power supply (see note 1).

If level error is a 10 dB multiple [e.g., -20 dBm instead of 0 dBm], check 10 dB step attenuator (see note 3).

Check levelers (see note 6).

Check detectors (see note 7).

Check AM level control circuit (see note 8).

Check AM modulator circuit (see note 9).

Check level log amp (see note 10).

Check detector temperature compensation circuit (see note 11).

Check leveling sampler (see note 12).

5.2.4 OUTPUT FREQUENCY UNLOCKED

Symptoms: The 'LOCK' indicator on the front panel is dark whenever any phase lock loop circuit in the instrument is unlocked. The output frequncy will drift; the degree of frequency error depends on the nature of the fault.

RECOMMENDATIONS:

Check power supplies (see note 1).

For purposes of comparison it may be necessary to calculate the reference frequency appropriate for the selected output frequency. The algorithm for determining this reference frequency is presented in manual section three.

Determine which loop is unlocked (see note 13). If more than one PLL circuit is unlocked, work backwards from the output PLL as described below.

Check power supply (see note 1).

Check output PLL (see note 14).

Check divide-by-N circuit (see note 15).

Check output YIG driver circuit (see note 16).

Check reference PLL (see note 17).

Check reference sampler (see note 18).

Check reference YIG driver circuit (see note 19).

Check 100 MHz PLL (see note 20).

If unlock occurs below 2 GHz, check Fixed L.O. PLL (see note 21).

5.2.5 OUTPUT LOCKED, BUT FREQUENCY INCORRECT

Symptoms: The 'LOCK' indicator is illuminated; the output frequency is stable, but incorrect.

RECOMMENDATIONS:

The troubleshooting procedure is the same as for the unlocked condition described above. The same circuits are likely to be at fault, even if there is no indication of unlock; the problem may be caused by improper control or frequency inputs, rather than by complete circuit failure. The divide-by-N circuit is particularly suspect (see note 11).

5.2.6 FRONT PANEL CONTROL MALFUNCTION (GENERAL)

Symptoms: The instrument does not respond appropriately to a front panel control setting.

RECOMMENDATIONS:

Check power supply (see note 1).

Check the front panel PIA (see note 22).

Check the front panel switches (see note 23).

5.2.7 ANALOG SWEEP MALFUNCTION

Symptoms: The instrument does not sweep through the selected frequency range in accordance with the operator's commands, or does not generate the auxiliary sweep output signals.

RECOMMENDATIONS:

Check power supply (see note 1).

Check the YIG driver board (see note 24).

Check the analog sweep board (see note 25).

Check the ramp control board (see note 26).

Check the sweep trigger board (see note 27).

5.2.8 PULSE MODULATION MALFUNCTION

Symptoms: Instrument does not pulse modulate its RF output in accordance with the operator's commands.

Check power supply (see note 1).

Check the pulse modulator (see note 28).

Check the pulse modulation circuit board (see note 29).

Check the AM level control circuit board (see note 30).

5.2.9 AMPLITUDE MODULATION MALFUNCTION

Symptoms: Instrument does not amplitude modulate its RF output in accordance with the operator's commands.

RECOMMENDATIONS:

Check power supply (see note 1).

Check the leveler (see note 31).

Check the AM level control board (see note 32).

Check the AM modulator board (see note 33).

5.2.10 IEEE-488 INTERFACE MALFUNCTION

Symptoms: Instrument does not respond appropriately to commands sent via the interface, or exhibits a particular malfunction (see 5.2.1 through 5.2.9 above) only while under remote control.

RECOMMENDATIONS:

Check power supply (see note 1).

Check GPIB address (see note 34).

Verify that all commands used are appropriate to this instrument (see note 35).

Check IEEE-488 circuit board (see note 36).

5.3 TROUBLESHOOTING NOTES

NOTE 1 -- POWER SUPPLY

This is the common denominator among malfunctions of all types. Because the instrument has many regulated and unregulated supplies, and they are not all used by all circuits, it is possible for the failure of a single supply to disable only a part of the system. For this reason power supply voltages should be checked whenever there is an instrument malfunction, even though the malfunction may seem too localized or specific to have such a cause.

The power supply circuit boards (A101 and A102) and the three-terminal voltage regulators are mounted on a heatsink behind the cooling fan. This location is not easily accessible, and it is is usually preferable to check supply voltages at their various destinations (plug-in circuit boards throughout the instrument).

The individual supplies are:

+5 volts (computer) -- Used by TTL-level digital devices in the system computer. Color code: red.

+5 volts (general) -- Used by TTL-level devices outside of the computer. Color code: red.

-5.2 volts -- Used by ECL-type high speed logic devices (frequency dividers, etc.). Color code: green.

+15 volts (general) -- Furnishes the positive voltage needed by amplifiers, drivers, etc. Color code: blue.

+15 volts (heater) -- A supply that is not switched (it is on whenever the instrument is plugged in) and is used by the 100 MHz crystal oven, and by the high stability time base, if installed. Color code: blue/black.

-15 volts -- Furnishes the negative voltage needed by amplifiers, drivers, etc. Color code: violet.

+20 volts -- Used by the YIG oscillators, via the YIG driver circuits. Color code: orange.

+20 volts (unregulated) -- Used by the YIG driver and attenuator driver circuits; actually nearer +30 volts in practice. Color code: yellow.

8 volts AC, with +5V DC offset -- Used as a heater voltage by the fluorescent displays. Color code: white/gray.

+35 volts -- Used by the fluorescent display drivers. Color code: gray.

CORRECTIVE ACTION

Check the line fuse; replace it if it is open. If the new fuse opens, check the power supply primary and secondary circuits. If any

supply is at an incorrect value, remove all plug-in boards. Check the voltages on the filter capacitors. If the overload persists, open the supply regulator output and verify regulator input and output voltages. Replace the boards one at a time to isolate the overload.

NOTE 2 -- THE COMPUTER SYSTEM

All instrument functions are controlled by the computer system, and a general computer failure will result in a general instrument failure. The computer is based on the Motorola 6809 microprocessor. It uses a bus architecture which corresponds on a one-to-one basis with the signals from and to the 6809 chip itself, with two exceptions: the DMA/BREQ signal into the 6809 is not used, and the three high order address lines from the 6809 are decoded (on the CPU board) into eight page-lines for the bus.

CORRECTIVE ACTION

The computer consists of the following circuit boards:

A0 -- The general purpose Peripheral Interface Adapter or PIA, which acts as an interface between the microprocessor and a variety of other circuits.

A1 -- The IEEE-488 PIA, which acts as an interface between the microprocessor and the remote control bus. The board also houses circuits through which the computer controls the instrument's digital to analog converters.

A2 -- The CPU board, which houses the microprocessor, the "reset" PROM in which initialization data are stored, and some of the control logic through which it runs the instrument.

A3 -- The front panel PIA board, which acts as an interface between the front panel switches and the microprocessor.

A4 -- The memory board, which holds the PROM devices in which the instrument's operating software is stored, as well as RAM chips used by the computer for temporary data storage.

A5 -- The display PIA board, which acts as an interface between the microprocessor and the front panel displays.

When a computer failure is suspected, the best way to troubleshoot the system is to isolate the problem to board level by substituting known good boards. If the computer seems to have "gotten lost", it can be reset either by pressing the reset button on the CPU board (A2) or by turning the power switch off and on. If the system is only partially disabled, the above descriptions and the diagrams given in section 7 may be used to determine the probable area of failure. Be sure that the plated edges of the computer boards are clean; dirt on these connectors is the most frequent cause of computer malfunction.

NOTE 3 -- 10 dB STEP ATTENUATOR

The programmable attenuator is capable of attenuating the RF output by as much as 110 dB; if the output is not at the desired power level, the cause may be that the attenuator is being improperly programmed. Note that the attenuator is outside of the leveling loop, and therefore the leveling system cannot detect, or compensate for, attenuator errors.

CORRECTIVE ACTION

The programmable attenuator's internal structure includes a series of relays which add or remove attenuation devices (10 dB, 20 dB, 40 dB, etc.) to achieve the desired total attenuation. The relay drivers which select these increments are located on the pulse modulation circuit board (A17). Verify that the attenuator is receiving the appropriate drive signals; if not, investigate the drivers on the A17 and the computer logic lines which control them.

NOTE 4 -- MODULATORS

The RF path between each YIG oscillator and the output attenuator includes path-switching circuits which are used to pulse modulate the signal. These circuits are configured so that a negative voltage turns the signal "on" and a positive voltage turns it "off". If the control line for the path which should be active is held at the "off" logic level, the RF signal will be shut down.

CORRECTIVE ACTION

The modulator control lines to the RF modules (which originate at PC board A7) have voltage levels of roughly +1 volt for "off" and -1 volt for "on". If inappropriate signals are received, investigate the driver circuits on the A7 board and the computer logic lines which control them. It may also be necessary to investigate the control signals (originating on PC board A6) which are used to activate the various RF modules and the various bands of the downconverter module. Note: during operation in the downconverter range, outputs are required from both the 2-8 and 8-12 YIGs.

NOTE 5 -- YIG OSCILLATORS

In addition to its power supply requirements, a YIG oscillator must have current supplied to its tuning coil within an appropriate range in order to generate an RF output (excessive or insufficient current will cause the oscillator to shut down). A loss of output power in a particular YIG band may simply mean that the associated oscillator is disabled. Remember that frequencies in the downconverter range (below 2 GHz) are derived from two oscillators (2-8 and 8-12).

CORRECTIVE ACTION

Tuning coil current may be calculated from the observed voltage drop across the sense resistor. This is a large, metal-encased, high wattage resistor (usually 5 or 7 ohms) mounted near the oscillator. One end is grounded, and the other is connected (through an NPN transistor and the associated YIG driver board) to the negative end of the YIG tuning coil. The sensitivity of the YIG oscillator is 20 MHz/mA; the current (in mA) required for a given frequency can be found by dividing the frequency (in MHz) by 20. (NOTE: For the 18-26 GHz YIG, the sensitivity is 30 MHz/mA and current is calculated by dividing the frequency by 30.) Current values corresponding to frequencies outside of the oscillator's range will cause it to shut down.

If the coil current is out of range, investigate the NPN transistor and the YIG driver circuit which controls it.

NOTE 6 -- LEVELERS

The RF path for each frequency band includes a voltage controlled attenuator circuit, or "leveler". The AM level control circuit (A7) uses complementary output transistors to drive the leveler pins on the outside of the modules. The leveler increases attenuation as the control input becomes more positive, and decreases attenuation as it goes negative. Sensitivity to the control voltage varies considerably from one module to another; the control range is (very roughly) -2 volts to +12 volts.

CORRECTIVE ACTION

When the output level is incorrect, the leveler input voltage may be clearly wrong in a way which indicates the cause of the problem. This situation can exist in four basic variations:

RF OUTPUT	CONTROL PIN	INDICATION
too low	+ rail	level control circuit is reducing RF power by sending the wrong signal
too low	- rail	level control circuit is striving unsuccessfully to compensate for loss somewhere in RF path
too high	+ rail	leveler circuit within module is faulty
too high	- rail	level control circuit is increasing RF power by sending the wrong signal

If the control voltage is within the extremes of its range, but the output level is still incorrect, the fault is probably within the level control circuit (A7), and could require no more than calibration. A failure of the leveler or other circuits within the RF modules is not very likely, but can occur when excessive reverse power is applied to the instrument's RF output connector.

NOTE 7 -- DETECTORS

The instrument's leveling system requires feedback from the RF path in order to control output power. This is provided by two negative-output diode detectors, driven by signals coupled from the RF output. The internal detector is mounted directly on the level coupler output of the RF module. A remote detector can also be used, by attaching the cable from it to the external ALC input on the rear panel.

CORRECTIVE ACTION

A failure of the internal detectors themselves is unlikely, but it is important to verify that the detector signal is in fact being received by the level control board (A7). When there is an apparent failure of the leveling system, disconnecting the detector cable and observing the resulting changes is often a revealing experiment.

NOTE 8 -- AM LEVEL CONTROL CIRCUIT

This circuit is located on the A7 PC board. Its function is to drive the levelers in the RF modules.

CORRECTIVE ACTION

Verify that the correct leveling band is being activated; if not, check the band select signals received by the board (Note: the 2-8 leveler is used during operation in the downconverter band). Make sure that the control output is reaching the appropriate leveler. Verify that appropriate signals are being received from the AM modulator board (A113). The potentiometers located on the board may be out of adjustment; see the calibration procedure in section 4. If possible, replace the circuit with a known good board.

NOTE 9 -- AM MODULATOR BOARD

This circuit is located on the A113 PC board. Its function is to furnish both a leveling output and a modulation output to the AM level control circuit (A7).

CORRECTIVE ACTION

Make sure that the leveling and modulation outputs are reaching the A7 board. Verify that the AC leveling and DC leveling inputs are both being received from the level log amp PC board (A19). Verify that the modulation input (if the AM mode is active) is being received from the front panel 'AM IN' connector. The potentiometers located on the board may be out of adjustment; see the calibration procedure in section 4. If possible, replace the circuit with a known good board.

NOTE 10 -- LEVEL LOG AMP

This circuit is located on the A19 PC board. Its function is to condition the amplified detector signal (received from the leveling sampler circuit, A18) to be linear in dB.

CORRECTIVE ACTION

Verify that the correct signal paths are active (depending on the detector and mode in use); if not, check the control signals being received by the board. Make sure that the AC and DC leveling outputs (respectively, before and after the logarithmic amplifier) are reaching the A113 board. Verify that the temperature compensation correction signal is being received from the A111 board. The potentiometers on the board may be out of adjustment; see the calibration procedure in section 4. If possible, replace the circuit with a known good board.

NOTE 11 -- DETECTOR TEMPERATURE COMPENSATION CIRCUIT

This circuit is located on the A111 PC board. Its function is to furnish a correction signal to the A19 board which compensates for changes in detector sensitivity due to temperature changes.

CORRECTIVE ACTION

Verify that the correction signal is reaching the A19 board. The temperature sensor may be heated or cooled to observe the circuit's response. Be sure that the appropriate detector band is being activated, since the two internal detectors are independantly corrected.

NOTE 12 -- LEVELING SAMPLER

This circuit is located on the A18 PC board. Its function is to sample the signal from the active detector (intermittently, if the RF output is pulse modulated) and amplify it for use by the A19 board.

CORRECTIVE ACTION

Verify that the amplified detector signal (CW or pulse, as applicable) is reaching the A19 board. Verify that the appropriate detector and mode are being selected by the input logic; if not, check the control signals being received by the board. Make sure that the detector signal and modulation signal (if applicable) are also being received. The potentiometers on the board may be out of adjustment; see the calibration procedure in section 4. If possible, replace the circuit with a known good board.

NOTE 13 -- LOCK INDICATORS

The front panel 'LOCK' LED goes dark whenever any of the instrument's phase lock loops is unlocked. In order to isolate the faulty PLL, it is necessary

to examine the lock indicators on the individual circuit boards.

The LED indicators on the PLL boards are really "unlock" indicators, since they are illuminated only for the unlocked condition. The PLL circuits are as follows:

Output PLL (PC A9)
Reference PLL (PC A16)
100 MHz PLL (PC A8)
Fixed L.O. PLL (PC A15 -- only in units including the downconverter band)
10-12 MHz PLL (A108 -- only in units including the 1 kHz resolution option)

NOTE 14 -- OUTPUT PLL

This circuit is located on the A9 PC board. Its function is to fine-tune the output YIG oscillator in order to phase lock the RF output to the instrument's 10 MHz master reference.

CORRECTIVE ACTION

Be sure that the appropriate YIG range output is activated (8-12 for the downconverter range). A 1 MHz signal should be received from the divide-by-N board (A20) and a 10 MHz signal from the 100 MHz PLL. Be sure that the output correction signal is reaching the YIG oscillator's FM coil. If possible, replace with a known good board.

NOTE 15 -- DIVIDE-BY-N

This circuit is located on the A20 PC board. Its function is to divide the IF received from the reference mixer by the number with which it is programmed; when the output loop is locked, the quotient will be 1 MHz.

CORRECTIVE ACTION

Be sure that the IF is being received from the reference mixer (if not, determine whether the mixer is receiving both the input from the reference coupler and the coupled output frequency from the mixer switch.) Since the IF should be divided down to 1 MHz, the programmed divisor should equal the IF in MHz. That is, when the IF equals 295 MHz, the divisor should equal 295. The IF is equal to the difference between the output frequency and the reference frequency; see section 3 for the algorithm by which these frequencies are calculated. Verify that the board is being programmed with the correct divisor in the form of a 9-bit binary number. If the circuit is dividing by the wrong number, the result will often be that the output loop locks on the wrong frequency (2002 MHz instead of 2000 MHz, for example). Be sure that the output frequency is reaching the output PLL. If possible, replace with a known good board.

NOTE 16 -- OUTPUT YIG DRIVER

If the output YIG oscillator is being incorrectly tuned by the driver circuit, the frequency error thus introduced may be too great for the output phase lock loop to correct.

CORRECTIVE ACTION

Coarse-tuning problems sometimes occur after incorrect adjustment of the YIG driver "MIN" and "MAX" pots, in which case the output loop may be able to lock at some frequencies but not others. If the instrument develops phase lock problems after calibration of the YIG driver, try repeating the adjustment, using the calibration procedure outlined in section 4.

If phase lock cannot be recaptured by adjusting the driver, try to determine whether the driver output is approximately correct for the requested output frequency. As described in note 5 above, the oscillator tuning coil has a sensitivity of 20 MHz/mA (30 MHz/mA for the 18-26 band). The NPN transistor which regulates coil current is driven at its base by a control voltage from the YIG driver. Because of large variations in coil impedance it is not possible to specify a "correct" voltage. However, it should be a positive voltage increasing with frequency at a rate of roughly 650 mV/GHz. Coil current can be determined from the voltage drop across the sense resistor.

If the driver output seems substantially wrong, the cause could be bad control data to the digital/analog converter, as well as bad calibration. The output PLL can only "capture" output signals that are within about 50 MHz of the desired value.

If possible, replace the circuit with a known good board.

NOTE 17 -- REFERENCE PLL

This circuit is located on the A16 board. Its function is to fine-tune the reference YIG oscillator in order to phase lock the reference frequency to the 10 MHz master reference. If it is unlocked, the output PLL will also be unlocked.

CORRECTIVE ACTION

Be sure that the output correction signal is reaching the FM coil of the reference YIG. Verify that the A16 board is receiving the 10 MHz reference from the A8 board, as well as the IF from the A103 board. The IF should be 1.667 MHz for output frequencies above 7999 MHz, otherwise it should be 5 MHz (the control line to the master reference divider should be set accordingly). Verify that the 'LOOP OFF' control input is held low. If possible, replace the circuit with a known good board.

NOTE 18 -- REFERENCE SAMPLER

This circuit is located on the 100 MHz oscillator board (A103). Its function is to furnish to the reference PLL an intermediate frequency, derived from the reference oscillator output and the harmonics of the 100 MHz oscillator.

CORRECTIVE ACTION

Verify that the signal from the reference coupler is being received, and that the 100 MHz signal is present on the input pin of the sampler module. Verify that the IF output is near 5 MHz (or 1.6 MHz if the RF output is above 7999 MHz), and is reaching the reference PLL).

NOTE 19 -- REFERENCE YIG OSCILLATOR/DRIVER

The 1.9-8.7 GHz YIG is used as the reference oscillator and is coarse-tuned by YIG driver A13.

CORRECTIVE ACTION

Verify that the reference YIG oscillator is being tuned appropriately. The reference YIG and its driver are equivalent to the output oscillators and drivers already described. The algorithm for determining the reference frequency for a given output frequency is described in section 3 of the manual.

NOTE 20 -- 100 MHz PLL

This circuit is located on PC board A8; the 100 MHz oscillator which it controls is located on PC board A103.

CORRECTIVE ACTION

Verify that the output control signal is reaching the A103 board, and that the feedback signal from that board is being received at the 100 MHz input. Verify that the 10 MHz reference input (including the external input, if in use) is being received. Be sure that the power supply output to the internal timebase is not being shut down unless an external timebase signal is present. Verify that the multiple 10 MHz reference outputs are reaching their destinations. If possible, replace the circuit with a known good board.

NOTE 21 -- FIXED L.O. PLL

This circuit is located on the A15 PC board; the fixed L.O. sampler from which it receives its 5 MHz IF is located on the A103 board. This circuit should operate only when the output frequency is in the downconverter band (below 2 GHz).

CORRECTIVE ACTION

Verify that the output control signal is reaching the 2-8 YIG oscillator. Be sure that the 'LOOP OFF' control signal is not shutting down the circuit when it should be active. Verify that the 10 MHz reference input is being received from the A8 board, and that the 5 MHz IF is being received from the A103 board. If possible, replace the circuit with a known good board.

The fixed L.O. sampler should receive a coupled 8005 MHz signal from the 2-8 module, and should furnish a 5 MHz IF to the PLL.

NOTE 22 -- FRONT PANEL PIA

This circuit is located on PC board A3.

CORRECTIVE ACTION

The computer uses this circuit to monitor the status of the front panel switches. Ten strobe lines are used; the banks of switches are strobed sequentially, and four lines of data are returned to the PIA, with the status of the four bits set by switch position. (The frequency select switches have separate data return lines from the other front panel buttons). Each strobe line may be used as a trigger to examine any of the four bits. See the front/rear panel interconnection diagram (section 7) for strobe and data line assignments. Verify that the strobes are being sent out, and that appropriate data are being returned for the given front panel switch setting. If possible, replace the circuit with a known good board.

NOTE 23 -- FRONT PANEL SWITCHES

The front panel frequency select switches and control buttons are mounted on small circuit boards which are not easily removable, but which can be accessed for the purpose of checking continuity or voltage levels.

CORRECTIVE ACTION

Verify that the switch strobes are being received from the front panel PIA board (A3) and that switch action and data returns are correct.

NOTE 24 -- YIG DRIVER BOARD

The analog sweep process is implemented through modification of the YIG driver's output control signal.

CORRECTIVE ACTION

A fault in this circuit may cause the instrument to sweep at the wrong rate, over the wrong range, or not at all. Verify that the sweep DAC is receiving the required voltage ramp from the sweep board (A24), and that

both DACs are receiving appropriate command signals from the computer. Be sure that the potentiometer on the output of the sweep DAC is not out of calibration. If possible, replace the circuit with a known good board.

NOTE 25 -- ANALOG SWEEP BOARD

This circuit is located on the A24 PC board. It produces sweep ramps, markers, and other signals necessary to analog sweep operation.

CORRECTIVE ACTION

This circuit requires control signals from the computer and from the sweep trigger board. Verify that the circuit is receiving the required signals, and is furnishing the necessary outputs to the YIG drivers and to the front and rear panel connectors. If possible, replace the circuit with a known good board.

NOTE 26 -- RAMP CONTROL CIRCUIT

This circuit is located on the module switching board (A6). It is used to generate the analog sweep output ramp, and to decode certain computer control signals for use by the A24 board.

CORRECTIVE ACTION

This circuit includes two DACs in a configuration similar to the YIG driver board: one DAC uses a fixed reference, and the other is driven by a voltage ramp from the A24 board. Verify that the circuit is receiving the ramp and the needed control signals from the computer, and that its outputs are reaching their destinations.

NOTE 27 -- SWEEP TRIGGER BOARD

This circuit is located on the A116 PC board, which also includes the FM driver. Its function is to trigger the start of an analog sweep.

CORRECTIVE ACTION

Verify that the needed control signals are being received from the computer and the front panel. Be sure that the two 'unblank' outputs are reaching their destinations on the A24 board.

NOTE 28 -- PULSE MODULATORS

As described in note 4 above, the switching circuits in the RF modules are used for pulse modulation.

CORRECTIVE ACTION

Verify that the modulation control pin on the appropriate RF module has positive pulses corresponding with the "off" periods of the modulation waveform; these pulses should be received from the A7 PC board. Note that, during operation in the downconverter range, the modulation pulses are applied to the 8-12 module; also note that the 2-8 module features three different ranges having individual modulators.

NOTE 29 -- PULSE MODULATION CIRCUIT

This circuit is located on the A17 PC board.

CORRECTIVE ACTION

Verify that the circuit is receiving the required signals and control voltages, including the 10 MHz reference, the computer select lines, and voltages from the front panel potentiometers. Verify that the desired modulation waveform is present at the modulator output and is reaching the A18 board. If possible, replace with a known good board.

NOTE 30 -- AM LEVEL CONTROL CIRCUIT

This circuit is located on the A7 PC board.

CORRECTIVE ACTION

Verify that the modulation pulses are present at the output drive circuits and are reaching the appropriate modulators. Be sure that the circuit is receiving the required modulation signal (from the A18 board) and control signals (from the computer). If possible, replace with a known good board.

NOTE 31 -- LEVELERS

The leveler circuits in the RF modules, described in note 6 above, are used for amplitude modulation as well as for leveling.

CORRECTIVE ACTION

Be sure that the modulation waveform is being received from the A7 board; the module's RF output power should increase as the modulation input grows more negative.

NOTE 32 -- AM LEVEL CONTROL CIRCUIT

This circuit is located on the A7 PC board.

CORRECTIVE ACTION

Verify that the modulation and level inputs are being received from the AM modulator board, and that the circuit is being correctly programmed (see ALC SELECT) for AM. The modulation/level signal should be present at the appropriate output (the 2-8 output for operation in the downconverter range). Verify that the output signal is reaching the appropriate leveler module. If possible, replace with a known good board.

NOTE 33 -- AM MODULATOR CIRCUIT

This circuit is located on the A113 PC board.

CORRECTIVE ACTION

Verify that the "AC" (before log amp) and "DC" (after log amp) leveling signals are being received from the A19 board. The potentiometers on the board may be out of adjustment; see the calibration procedure in section 4. Verify that the two leveling output signals are reaching the A7 board. If possible, replace the circuit with a known good board.

NOTE 34 -- GPIB ADDRESS

The DIP switches which set the address are located on the A110 PC board, which is mounted at the rear panel.

CORRECTIVE ACTION

Verify that the address assigned to the instrument by the GPIB bus controller is properly set (in the form of a 5-place binary number) by the five switches located on the rear panel. If the address is set incorrectly, the instrument will ignore all IEEE-488 commands.

NOTE 35 -- COMMANDS

Section 1 includes a full description of the syntax and commands appropriate to the operation of the Model 910 under remote control using the IEEE-488 interface bus. Be sure that any remote commands issued to the instrument conform to the guidelines set out in that description.

NOTE 36 -- IEEE-488 INTERFACE CIRCUIT

This circuit is found on the A1 PC board.

CORRECTIVE ACTION

Verify that this circuit's data and control lines have continuity to the rear panel connector and to the CPU. If possible, replace the circuit with a known good board.

PARTS LISTS

Parts List for SHIPPING ASSY M910 No. 106DA01100 Rev. A

Item	Part Number	Qty	FSCM	Mfr's Part Number	Description
1	106DA01200	1	58900	106DA01200	TEST ASSY M910
2	101BF01000	4	58900	101BF01000	HANDLE FLANGE
3	101BF01900	1	58900	101BF01900	F00T SUPPORT
4	101BF09400	2	58900	101BF09400	FRONT TRIM SIDE
5	101CF00100	1	58900	101CF00100	TOP COVER
6	101CF00200	1	58900	101CF00200	BOTTOM COVER
7	101CF01100	2	58900	101CF01100	SIDE CHANNEL
8	101CF09500	2	58900	101CF09500	FRONT TRIM
9	106DF00700	1	58900	106DF00700	FRONT PANEL M 910
10	101DF01200	2	58900	101DF01200	SIDE TRIM
11	101DF01700	4	58900	101DF01700	CORNER FRAME
12	HSDH-61104	12	55566	4537-632-SS-0	6-32 X 11/16 M/F HEX SPCR
13	101BF21400	1	58900	101BF21400	CHASSIS NOMENCLATURE LBL
14	HH00-62456	2	88245	A1034-30	OVAL BLACK HANDLE
15	HHR0-31456	2	88245	A1013-30	ROUND BLACK HANDLE
16	HSDH-81006	6	06540	9755-SS-0832	8-32 X 5/8 M/F HEX SPACER
17	KGBD-63125	2	32767	G-1-106D	1/8" SHFT GRAY BAR KNOB
18	101BF21600	1	58900	101BF21600	PC BOARD PULLER
19	KGR0-50125	4	32767	G-1-103	1/8" SHFT GRAY RND KNOB
20	WMP0-03006	1	B0001	17560B	RT ANG IEC POWER CORD
21	101CF23600	2	58900	101CF23600	SUB COVER
22	HFBI-00012	1	B0002	MP-40008-4	12" INSIDE MOUNT BAIL
23	HFFL-63202	2	B0002	PP 40012-1	LEFT FRONT FOOT
24	HFFR-63202	2	B0002	PP 40012-2	RIGHT FRONT FOOT
25	HNTU-63206	8	78553	???	#6 TINNERMAN NUT
27	101BF21800	1	58900	101BF21800	MODULE LABEL SET
28	001BF01100	1	58900	001BF01100	FOIL CAL
29	101BA08000	1	58900	101BA08000	COMPUTER EXTENDER ASSY
30	101BA08100	1	58900	101BA08100	MICROWAVE EXTENDER ASSY
31	101BA08200	1	58900	101BA08200	FLOATING EXTENDER ASSY

Parts List for TEST ASSY M910 No. 106DA01200 Rev. E

Item		Part Number	Qty	FSCM	Mfr's Part Number	Description
	1	106DA01300	1	58900	106DA01300	CHASSIS ASSY M910
	26	106BA04000	1	58900	106BA04000	SWEEP TRIGGER
	27	105BA17800	1	58900	105BA17800	FM DRIVER
	28	106CA04100	1	58900	106CA04100	DOWN CONV/LVL CORRN ASSY
A	1	101CA06700	1	58900	101CA06700	IEEE PIA PC ASSY
A	2	101CA35800	1	58900	101CA35800	CPU (64K) ASSY
A	3	101CA07000	1	58900	101CA07000	FRONT PANEL SW PIA PC ASY
A	4	101CA35700	1	58900	101CA35700	MEMORY (64K) PC ASSY
A	5	101CA29500	1	58900	101CA29500	DISPLAY PIA ASSY
A	6	106CA03800	1	58900	106CA03800	MODULE SWITCHING ASSY
A	7	101CA26200	1	58900	101CA26200	AM LEVEL CONTROL ASSY
A	8	101BA04900	1	58900	101BA04900	100 MHZ REF LOOP PC ASSY
A	9	105BA10500	1	58900	105BA10500	FM OUTPUT PLL ASSY
A	16	101BA07400	1	58900	101BA07400	REFERENCE PLL PC ASSY
A	17	101CA06602	1	58900	101CA06602	P.M. PC ASSY/H.P. ATTEN.
A	18	101CA25600	1	58900	101CA25600	LEVELLING LOG AMP ASSY
A	19	101CA25500	1	58900	101CA25500	LEVELLING SAMPLER ASSY
A	20	101CA06300	1	58900	101CA06300	DIVIDE BY N PC ASSY
A	24	106CA03901	1	58900	106CA03901	ANALOG SWEEP #1
A	25	106CA03902	1	58900	106CA03902	ANALOG SWEEP #2

Parts List for CHASSIS ASSY M910 No. 106DA01300 Rev. A

Item	Part Number	Qty	FSCM	Mfr's Part Number	Description
1	106DA01500	1	58900	106DA01500	MICRO. DECK ASSY M910
2	101CC17200	1	58900	101CC17200	DISPLAY INTERFACE CABLE
3	101CC17300	1	58900	101CC17300	IEEE INTERFACE CABLE
4	101DF23700	1	58900	101DF23700	SIDE GUSSET
5	101CA15701	1	58900	101CA15701	SAMPLER ELECT (NO <2) ASY
6	106CA01600	1	58900	106CA01600	ATTEN. DECK ASSY M910
7	101DA17700	1	58900	101DA17700	COMPUTER DECK ASSY W/TCXO
8	106CA01700	1	58900	106CA01700	REAR PANEL ASSY M910
9	101CA15000	1	58900	101CA15000	MICROWAVE CARD CAGE ASSY
10	106AW01300	1	58900	106AW01300	CHASSIS W/L M910
11	106CA01400	1	58900	106CA01400	FRONT PANEL ASSY M910
13	101BA29400	1	58900	101BA29400	DETECTOR TEMP COMP ASSY
14	101DA15100	1	58900	101DA15100	HEATSINK ASSY
A 25	105CA10200	1	58900	105CA10200	DRIVER/TRIGGER ASSY
A 26	106BA01800	1	58900	106BA01800	START FREQ HOLD PC ASSY

Parts List for ATTEN. DECK ASSY M910 No. 106CA01600 Rev. A

Item	Part Number	Qty	FSCM	Mfr's Part Number	Description
1	101CF03600	1	58900	101CF03600	ATTENUATOR CHASSIS
2	101BF02301	1	58900	101BF02301	CONNECTOR MOUNTING PLATE
3	101BA26900	1	58900	101BA26900	LEVELLING CARD CAGE ASSY
4	JPSG-20022	1	11769	6022-044-450-001	44 PIN PC GUIDE CONN
5	JRAB-00200	2	93459	9934-3	SMA F BULK MT CONN
6	HLLT-40210	6	79963	505-#4	#4 SOLDER LUG
7	HSCS-404X4	2	06540	9707C-A-115	#4 X 1/4 SWAGE CLR SPACER
8	HSCS-406X4	6	06540	9709C-A-115	#4 X 3/8 SWAGE CLR SPACER
9	HSCR-40604	2	06540	9226A115	#4 X 3/8 CLEAR SPACER
10	HSTR-62004	2	06540	8165-A0632	6-32 X 1 1/4 SPACER
11	MCD1-00218	1	20550	2617S	1.7-18 GHZ DIR DET
12	MPB0-01801	1	28480	33322H	0-110DB 18GHZ PGM ATTEN
13	101BA23300	1	58900	101BA23300	AM MODULATOR ASSY

Parts List for FRONT PANEL ASSY M910 No. 106CA01400 Rev. A

Item	Part Number	Qty	FSCM	Mfr's Part Number	Description
1	101DF01301	1	58900	101DF01301	FRONT SUB PANEL
2	101CA03000	1	58900	101CA03000	DISPLAY PC ASSY
3	101BA02700	1	58900	101BA02700	LEVER SWITCH PC ASSY
4	101BA02800	3	58900	101BA02800	ROTARY SWITCH PC ASSY
5	106AW01400	1	58900	106AW01400	M 910 FRONT PANEL W/L
6	101BA15806	1	58900	101BA15806	LEVEL SWITCH ASSY
7	101BA15805	1	58900	101BA15805	SWEEP SWITCH ASSY
8	101DA15804	1	58900	101DA15804	6 BUTTON MOD. SW ASSY
9	RABA-21000	2	01121	70B1N040R103W	10K POT 1/8"SH 1T PNL
10	RABA-31000	1	01121	70B1N040R104W	100K POT 1/8"SH 1T PNL
11	ILGR-00200	4	58361	MV5253	GREEN LED .2" DIA
12	JRDF-00001	5	02660	31-221	BNC F PANEL MOUNT
13	101BF05100	3	58900	101BF05100	LEVER SWITCH MOUNT
14	ILMC-00200	4	58361	MP51	LED MOUNTING CLIP
15	HLLT-40210	2	79963	505-#4	#4 SOLDER LUG
16	HLLT-K1114	2	79963	814	3/8" (BNC) SOLDER LUG
17	HSTH-42503	3	06540	8120-SS-0440	4-40 X 1 9/16 HEX SPACER
18	RN55-06810	1	05905	SMA 0207 E 96	681 OHMS 1% MET FILM

Parts List for REAR PANEL ASSY M910 No. 106CA01700 Rev. A

Item	Part Number	Qty	FSCM	Mfr's Part Number	Description
1	101DF00700	1	58900	101DF00700	REAR PANEL
2	106AW01700	1	58900	106AW01700	M 910 REAR PANEL W/L
3	101BA04700	1	58900	101BA04700	ADDRESS SWITCH ASSY
4	RABE-15000	1	84084	255-208-5K	5K POT 15T BUSH MNT
5	RABE-22000	1	84084	255-00-20K	20K POT 15T BUSH MNT
6	STW0-00102	1	09353	7101-P4-D	SPDT TOGGLE SWITCH
7	JLFF-06250	1	05245	6J4	LINE FILTER/CONNEC
8	JRDF-00001	7	02660	31-221	BNC F PANEL MOUNT
9	BHS0-05000	2	23936	5502	FAN SCREEN
10	HLLT-K1114	4	79963	814	3/8" (BNC) SOLDER LUG
11	BHG0-05000	2	R0003	476042	FAN FINGER GUARD
12	FSAC-00250	1	75915	31302.5	2.5A SB FUSE 3AG

Parts List for IEEE PIA PC ASSY No. 101CA06700 Rev. B

Item		Part Number	Qty	FSCM	Mfr's Part Number	Description
	1	101CF06700	1	58900	101CF06700	IEEE PIA BD
C	1	CT10-06390	1	56289	150D396X9010B2	39 UF 10V TANTALUM
C	2	CC50-03100	1	51642	150-100-W5R-103K	.01 UF CERAMIC X7R
C	3	CC50-03100	1	51642	150-100-W5R-103K	.01 UF CERAMIC X7R
C	4	CT10-06390	1	56289	150D396X9010B2	39 UF 10V TANTALUM
C	5	CC50-03100	1	51642	150-100-W5R-103K	.01 UF CERAMIC X7R
C	6	CC50-03100	1	51642	150-100-W5R-103K	.01 UF CERAMIC X7R
C	7	CC50-03100	1	51642	150-100-W5R-103K	.01 UF CERAMIC X7R
C	8	CT10-06390	1	56289	150D396X9010B2	39 UF 10V TANTALUM
IC	1	UTN0-03651	1	01295	SN74LS365N	SN74LS365 HEX DRIVER
IC	2	UGN0-09914	1	01295	TMS9914NL	TMS9914NL IEEE-488
IC	3	UIN0-75162	1	01295	SN75162N	SN75162N IEEE BUFFER
IC	4	UIN0-75160	1	01295	SN75160N	SN75160N IEEE BUFFER
IC	5	UTN0-00170	1	01295	SN7417N	SN7417N HEX BUFFER
IC	6	UTN0-02451	1	01295	SN74LS245N	SN74LS245N 8X TRANSCEIVER
IC	7	UTN0-02441	1	01295	SN74LS244N	SNL4LS244N 8X DRIV/RECV
IC	8	101AC28401	1	58900	101AC28401	ADDRESS ROM A1
IC	9	UTN0-02441	1	01295	SN74LS244N	SNL4LS244N 8X DRIV/RECV
IC	10	UTN0-00321	1	01295	SN74LS32N	SN74LS32N QUAD OR
IC	11	UTN0-00001	1	01295	SN74LS00N	SN74LS00 QUAD NAND
IC	12	UTN0-01381	1	01295	SN74LS138N	SN74LS138N 3 TO 8 DEC
IC	13	UGN0-06821	1	04713	MC6821P	MC6821P PIA
R	1	RN55-14750	1	05905	SMA 0207 E 96	4.75 K OHMS 1% MET FILM
R	2	RN55-14750	1	05905	SMA 0207 E 96	4.75 K OHMS 1% MET FILM
R	3	RN55-14750	1	05905	SMA 0207 E 96	4.75 K OHMS 1% MET FILM
R	4	RN55-14750	1	05905	SMA 0207 E 96	4.75 K OHMS 1% MET FILM
R	5	RN55-14750	1	05905	SMA 0207 E 96	4.75 K OHMS 1% MET FILM
R	6	RN55-14750	1	05905	SMA 0207 E 96	4.75 K OHMS 1% MET FILM
R	7	RN55-14750	1	05905	SMA 0207 E 96	4.75 K OHMS 1% MET FILM
R	8	RN55-14750	1	05905	SMA 0207 E 96	4.75 K OHMS 1% MET FILM
R	9	RN55-14750	1	05905	SMA 0207 E 96	4.75 K OHMS 1% MET FILM
R	10	RN55-14750	1	05905	SMA 0207 E 96	4.75 K OHMS 1% MET FILM
R	11	RN55-14750	1	05905	SMA 0207 E 96	4.75 K OHMS 1% MET FILM
R	12	RN55-14750	1	05905	SMA 0207 E 96	4.75 K OHMS 1% MET FILM
R	13	RN55-14750	1	05905	SMA 0207 E 96	4.75 K OHMS 1% MET FILM
R	14	RN55-14750	1	05905	SMA 0207 E 96	4.75 K OHMS 1% MET FILM
R	15	RN55-14750	1	05905	SMA 0207 E 96	4.75 K OHMS 1% MET FILM
R	16	RN55-14750	1	05905	SMA 0207 E 96	4.75 K OHMS 1% MET FILM
R	17	RN55-14750	1	05905	SMA 0207 E 96	4.75 K OHMS 1% MET FILM
R	18	RN55-14750	1	05905	SMA 0207 E 96	4.75 K OHMS 1% MET FILM
TP	1	ETST-06224	1	88245	1280B	TURRET TERMINAL
X	1	JSPL-10040	1	09922	DILBQ40P-101	40 PIN DIP LOCK SOCKET
X	2	JSPL-10040	1	09922	DILBQ40P-101	40 PIN DIP LOCK SOCKET
X	3	JSP0-10020	1	09922	DILB20P-108	20 PIN DIP SOCKET

Parts List for CPU PC ASSY No. 101CA06800 Rev. C

Item	Part Number	Qty	FSCM	Mfr's Part Number	Description
1	101CF06800	1	58900	101CF06800	CPU BD
C 1	CC50-00270	1	52763	EDPT-27-NP0-5%	27 PF CERAMIC NP0
C 2	CC50-00270	1	52763	EDPT-27-NP0-5%	27 PF CERAMIC NP0
C 3	CC50-02100	1	52763	EDPT-1000-Y5P10%	.001 UF CERAMIC Y5P
C 4	CT20-06022	1	56289	150D225X9020A2	2.2 UF 20V TANTALUM
C 5	CC50-03100	1	51642	150-100-W5R-103K	.01 UF CERAMIC X7R
C 6	CT10-06390	1	56289	150D396X9010B2	39 UF 10V TANTALUM
C 7	CC50-03100	1	51642	150-100-W5R-103K	.01 UF CERAMIC X7R
C 8	CC50-03100	1	51642	150-100-W5R-103K	.01 UF CERAMIC X7R
C 9	CC50-03100	1	51642	150-100-W5R-103K	.01 UF CERAMIC X7R
C 10	CT10-06390	1	56289	150D396X9010B2	39 UF 10V TANTALUM
C 11	CC50-03100	1	51642	150-100-W5R-103K	.01 UF CERAMIC X7R
C 12	CC50-03100	1	51642	150-100-W5R-103K	.01 UF CERAMIC X7R
C 13	CC50-03100	1	51642	150-100-W5R-103K	.01 UF CERAMIC X7R
IC 1	UTN0-01230	1	01295	SN74123N	SN74123N DUAL ONE SHOT
IC 2	UGN0-06809	1	04713	MC6809P	MC6809P MICROPROCESSOR
IC 3	UTN0-02441	1	01295	SN74LS244N	SNL4LS244N 8X DRIV/RECV
IC 4	UTN0-02441	1	01295	SN74LS244N	SNL4LS244N 8X DRIV/RECV
IC 5	UTN0-02441	1	01295	SN74LS244N	SNL4LS244N 8X DRIV/RECV
IC 6	UTN0-02451	1	01295	SN74LS245N	SN74LS245N 8X TRANSCEIVER
IC 7	UTN0-02451	1	01295	SN74LS245N	SN74LS245N 8X TRANSCEIVER
IC 8	UMN0-02716	1	61485	HN462716	HN422716 2K X 8 EPROM
IC 9	UTN0-01381	1	01295	SN74LS138N	SN74LS138N 3 TO 8 DEC
IC 10	UTN0-02401	1	01295	SN74LS240N	SN74LS240 8X DRIV/RECV
IC 11	101AC28402	1	58900	101AC28402	ADDRESS ROM A2
IC 12	UTN0-00170	1	01295	SN7417N	SN7417N HEX BUFFER
IC 13	UTN0-00250	1	01295	SN7425N	SN7425N DUAL 4 IN NOR
IC 14	UGN0-06522	1	55576	SYP6522	SYP6522 VIA
P 1	101BA28300	1	58900	101BA28300	PLUG IN HEADER ASSY
R 1	RN55-21000	1	05905	SMA 0207 E 96	10 K OHMS 1% MET FILM
R 2	RN55-21000	1	05905	SMA 0207 E 96	10 K OHMS 1% MET FILM
R 3	RN55-21000	1	05905	SMA 0207 E 96	10 K OHMS 1% MET FILM
R 4	RN55-21000	1	05905	SMA 0207 E 96	10 K OHMS 1% MET FILM
R 5	RN55-21000	1	05905	SMA 0207 E 96	10 K OHMS 1% MET FILM
R 6	RN55-21000	1	05905	SMA 0207 E 96	10 K OHMS 1% MET FILM
R 7	RN55-21000	1	05905	SMA 0207 E 96	10 K OHMS 1% MET FILM
R 8	RN55-21000	1	05905	SMA 0207 E 96	10 K OHMS 1% MET FILM
R 9	RN55-11000	1	05905	SMA 0207 E 96	1 K OHMS 1% MET FILM
R 10	RN55-11000	1	05905	SMA 0207 E 96	1 K OHMS 1% MET FILM
R 11	RN55-21210	1	05905	SMA 0207 E 96	12.1 K OHMS 1% MET FILM
R 12	RN55-24750	1	05905	SMA 0207 E 96	47.5 K OHMS 1% MET FILM
R 13	RN55-11000	1	05905	SMA 0207 E 96	1 K OHMS 1% MET FILM
R 14	RN55-11000	1	05905	SMA 0207 E 96	1 K OHMS 1% MET FILM
R 15	RN55-11000	1	05905	SMA 0207 E 96	1 K OHMS 1% MET FILM
R 16	RN55-11000	1	05905	SMA 0207 E 96	1 K OHMS 1% MET FILM
R 17	RN55-11000	1	05905	SMA 0207 E 96	1 K OHMS 1% MET FILM
R 18	RN55-11000	1	05905	SMA 0207 E 96	1 K OHMS 1% MET FILM
R 19	RN55-14750	1	05905	SMA 0207 E 96	4.75 K OHMS 1% MET FILM
R 20	RN55-21000	1	05905	SMA 0207 E 96	10 K OHMS 1% MET FILM
S 1	SDP0-00801	1	71450	206-8	8 SPST DIP SWITCH
S 2	SPP0-00101	1	09353	TP11-H8AB	SPST BUTTON SW PC MNT

Parts List for CPU PC ASSY No. 101CA06800 Rev. C

Item		Part Number	Qty	FSCM	Mfr's Part Number	Description
TP	1	ETST-06224	1	88245	1280B	TURRET TERMINAL
X	1	JSP0-10016	1	09922	DILB16P-108	16 PIN DIP SOCKET
X	2	JSPL-10040	1	09922	DILBQ40P-101	40 PIN DIP LOCK SOCKET
X	3	JSPL-10040	1	09922	DILBQ40P-101	40 PIN DIP LOCK SOCKET
X	4	JSP0-10020	1	09922	DILB20P-108	20 PIN DIP SOCKET
X	5	JSPL-10024	1	09922	DILBQ24P-101	24 PIN DIP LOCK SOCKET
Y	1	Y180-00358	1	E0001	ED035	3.58MHZ FUND XTAL

Parts List for FRONT PANEL SW PIA PC ASY No. 101CA07000 Rev. D

Item	Part Number	Qty	FSCM	Mfr's Part Number	Description
1	101CF07000	1	58900	101CF07000	FRONT PANEL SWITCH PIA BD
C 1	CC50-03100	1	51642	150-100-W5R-103K	.01 UF CERAMIC X7R
C 2	CC50-03100	1	51642	150-100-W5R-103K	.01 UF CERAMIC X7R
C 3	CC50-03100	1	51642	150-100-W5R-103K	.01 UF CERAMIC X7R
C 4	CC50-03100	1	51642	150-100-W5R-103K	.01 UF CERAMIC X7R
C 5	CC50-03100	1	51642	150-100-W5R-103K	.01 UF CERAMIC X7R
C 6	CC50-03100	1	51642	150-100-W5R-103K	.01 UF CERAMIC X7R
C 7	CT10-06390	1	56289	150D396X9010B2	39 UF 10V TANTALUM
C 8	CT10-06390	1	56289	150D396X9010B2	39 UF 10V TANTALUM
IC 1	UGN0-06821	1	04713	MC6821P	MC6821P PIA
IC 2	UCN0-05550	1	04713	MC14555BCP	MC14555BCP DUAL 1 OF 4
IC 3	UTN0-02451	1	01295	SN74LS245N	SN74LS245N 8X TRANSCEIVER
IC 4	UTN0-00170	1	01295	SN7417N	SN7417N HEX BUFFER
IC 5	UTN0-00321	1	01295	SN74LS32N	SN74LS32N QUAD OR
IC 6	UTN0-02441	1	01295	SN74LS244N	SNL4LS244N 8X DRIV/RECV
IC 7	101AC28403	1	58900	101AC28403	ADDRESS ROM A3
IC 8	UTN0-02441	1	01295	SN74LS244N	SNL4LS244N 8X DRIV/RECV
IC 9	UGN0-06821	1	04713	MC6821P	MC6821P PIA
IC 10	UCN0-00280	1	04713	MC14028BCP	MC14028BCP BCD/DECIMAL
R 1	RN55-01210	1	05905	SMA 0207 E 96	121 OHMS 1% MET FILM
R 2	RN55-01210	1	05905	SMA 0207 E 96	121 OHMS 1% MET FILM
R 3	RN55-01210	1	05905	SMA 0207 E 96	121 OHMS 1% MET FILM
R 4	RN55-14750	1	05905	SMA 0207 E 96	4.75 K OHMS 1% MET FILM
R 5	RN55-14750	1	05905	SMA 0207 E 96	4.75 K OHMS 1% MET FILM
R 6	RN55-11000	1	05905	SMA 0207 E 96	1 K OHMS 1% MET FILM
R 7	RN55-21000	1	05905	SMA 0207 E 96	10 K OHMS 1% MET FILM
R 8	RN55-21000	1	05905	SMA 0207 E 96	10 K OHMS 1% MET FILM
R 9	RN55-21000	1	05905	SMA 0207 E 96	10 K OHMS 1% MET FILM
R 10	RN55-21000	1	05905	SMA 0207 E 96	10 K OHMS 1% MET FILM
R 11	RN55-21000	1	05905	SMA 0207 E 96	10 K OHMS 1% MET FILM
R 12	RN55-21000	1	05905	SMA 0207 E 96	10 K OHMS 1% MET FILM
R 13	RN55-21000	1	05905	SMA 0207 E 96	10 K OHMS 1% MET FILM
R 14	RN55-21000	1	05905	SMA 0207 E 96	10 K OHMS 1% MET FILM
R 15	RN55-21000	1	05905	SMA 0207 E 96	10 K OHMS 1% MET FILM
R 16	RN55-21000	1	05905	SMA 0207 E 96	10 K OHMS 1% MET FILM
R 17	RN55-21000	1	05905	SMA 0207 E 96	10 K OHMS 1% MET FILM
TP 1	ETST-06224	1	88245	1280B	TURRET TERMINAL
X 1	JSP0-10020	1	09922	DILB20P-108	20 PIN DIP SOCKET
X 2	JSPL-10040	1	09922	DILBQ40P-101	40 PIN DIP LOCK SOCKET
X 3	JSPL-10040	1	09922	DILBQ40P-101	40 PIN DIP LOCK SOCKET

Parts List for MEMORY PC ASSY No. 101CA06900 Rev. C

Item		Part Number	Qty	FSCM	Mfr's Part Number	Description
	1	101CF06900	1	58900	101CF06900	MEMORY BD
C	1	CC50-04100	1	56289	2CZ5U104X0050C4	.1 UF CERAMIC Z5U
C	2	CC50-04100	1	56289	2CZ5U104X0050C4	.1 UF CERAMIC Z5U
C	3	CC50-04100	1	56289	2CZ5U104X0050C4	.1 UF CERAMIC Z5U
C	4	CC50-04100	1	56289	2CZ5U104X0050C4	.1 UF CERAMIC Z5U
C	5	CC50-04100	1	56289	2CZ5U104X0050C4	.1 UF CERAMIC Z5U
C	6	CC50-04100	1	56289	2CZ5U104X0050C4	.1 UF CERAMIC Z5U
C	7	CC50-04100	1	56289	2CZ5U104X0050C4	.1 UF CERAMIC Z5U
C	8	CC50-04100	1	56289	2CZ5U104X0050C4	.1 UF CERAMIC Z5U
C	9	CC50-04100	1	56289	2CZ5U104X0050C4	.1 UF CERAMIC Z5U
C	10	CC50-04100	1	56289	2CZ5U104X0050C4	.1 UF CERAMIC Z5U
C	11	CC50-04100	1	56289	2CZ5U104X0050C4	.1 UF CERAMIC Z5U
C	12	CC50-04100	1	56289	2CZ5U104X0050C4	.1 UF CERAMIC Z5U
C	13	CC50-04100	1	56289	2CZ5U104X0050C4	.1 UF CERAMIC Z5U
C	14	CT20-06100	1	56289	150D106X9020B2	10 UF 20V TANTALUM
C	15	CT20-06100	1	56289	150D106X9020B2	10 UF 20V TANTALUM
IC	1	UMN0-02128	1	57793	TMM2016	TMM2016 2K X 8 RAM
IC	2	UMN0-02128	1	57793	TMM2016	TMM2016 2K X 8 RAM
IC	3	UMN0-02532	1	61485	HN462532	HN462532 4K X 8 EPROM
IC	4	UMN0-02532	1	61485	HN462532	HN462532 4K X 8 EPROM
IC	5	UMN0-02532	1	61485	HN462532	HN462532 4K X 8 EPROM
IC	6	UMN0-02532	1	61485	HN462532	HN462532 4K X 8 EPROM
IC	7	UMN0-02532	1	61485	HN462532	HN462532 4K X 8 EPROM
IC	9	UMN0-02532	1	61485	HN462532	HN462532 4K X 8 EPROM
IC	10	101AC28404	1	58900	101AC28404	ADDRESS ROM A4
IC	11	UTN0-02441	1	01295	SN74LS244N	SNL4LS244N 8X DRIV/RECV
IC	12	UTN0-02441	1	01295	SN74LS244N	SNL4LS244N 8X DRIV/RECV
IC	13	UTN0-02451	1	01295	SN74LS245N	SN74LS245N 8X TRANSCEIVER
IC	14	UTN0-02441	1	01295	SN74LS244N	SNL4LS244N 8X DRIV/RECV
IC	15	101AC28407	1	58900	101AC28407	ADDRESS ROM B4
R	1	RN55-05620	1	05905	SMA 0207 E 96	562 OHMS 1% MET FILM
R	2	RN55-05620	1	05905	SMA 0207 E 96	562 OHMS 1% MET FILM
TP	1	ETST-06224	1	88245	1280B	TURRET TERMINAL
X	1	JSPL-10024	1	09922	DILBQ24P-101	24 PIN DIP LOCK SOCKET
X	2	JSPL-10024	1	09922	DILBQ24P-101	24 PIN DIP LOCK SOCKET
X	3	JSPL-10024	1	09922	DILBQ24P-101	24 PIN DIP LOCK SOCKET
X	4	JSPL-10024	1	09922	DILBQ24P-101	24 PIN DIP LOCK SOCKET
X	5	JSPL-10024	1	09922	DILBQ24P-101	24 PIN DIP LOCK SOCKET
X	6	JSPL-10024	1	09922	DILBQ24P-101	24 PIN DIP LOCK SOCKET
X	7	JSPL-10024	1	09922	DILBQ24P-101	24 PIN DIP LOCK SOCKET
X	8	JSPL-10024	1	09922	DILBQ24P-101	24 PIN DIP LOCK SOCKET
X	9	JSPL-10024	1	09922	DILBQ24P-101	24 PIN DIP LOCK SOCKET
X	10	JSP0-10020	1	09922	DILB20P-108	20 PIN DIP SOCKET
X	11	JSP0-10020	1	09922	DILB20P-108	20 PIN DIP SOCKET

Parts List for DISPLAY PIA ASSY No. 101CA29500 Rev. A

Item		Part Number	Qty	FSCM	Mfr's Part Number	Description
	1	101CF29500	1	58900	101CF29500	DISPLAY PIA BD
C	1	CC50-03100	1	51642	150-100-W5R-103K	.01 UF CERAMIC X7R
C	2	CC50-03100	1	51642	150-100-W5R-103K	.01 UF CERAMIC X7R
C	3	CC50-03100	1	51642	150-100-W5R-103K	.01 UF CERAMIC X7R
C	4	CC50-03100	1	51642	150-100-W5R-103K	.01 UF CERAMIC X7R
C	5	CC50-03100	1	51642	150-100-W5R-103K	.01 UF CERAMIC X7R
C	6	CC50-03100	1	51642	150-100-W5R-103K	.01 UF CERAMIC X7R
C	7	CC50-03100	1	51642	150-100-W5R-103K	.01 UF CERAMIC X7R
C	8	CT10-06390	1	56289	150D396X9010B2	39 UF 10V TANTALUM
C	9	CT10-06390	1	56289	150D396X9010B2	39 UF 10V TANTALUM
IC	1	UCN0-00400	1	04713	MC14040BCP	MC14040BCP 12 BIT CTR
IC	2	UMN0-01824	1	02735	CDP1824CD	CDP1824CD 32X8 RAM
IC	3	UCN0-00280	1	04713	MC14028BCP	MC14028BCP BCD/DECIMAL
IC	4	UCN0-00290	1	04713	MC14029BCP	MC14029BCP 4 BIT CTR
IC	5	UMN0-01824	1	02735	CDP1824CD	CDP1824CD 32X8 RAM
IC	6	UCN0-00280	1	04713	MC14028BCP	MC14028BCP BCD/DECIMAL
IC	7	UGN0-06821	1	04713	MC6821P	MC6821P PIA
IC	8	UTN0-02451	1	01295	SN74LS245N	SN74LS245N 8X TRANSCEIVER
IC	9	UTN0-00170	1	01295	SN7417N	SN7417N HEX BUFFER
IC	10	UTN0-00321	1	01295	SN74LS32N	SN74LS32N QUAD OR
IC	11	UTN0-02441	1	01295	SN74LS244N	SNL4LS244N 8X DRIV/RECV
IC	12	101AC28409	1	58900	101AC28409	ADDRESS ROM A5
IC	13	UTN0-02441	1	01295	SN74LS244N	SNL4LS244N 8X DRIV/RECV
IC	14	UGN0-06821	1	04713	MC6821P	MC6821P PIA
IC	15	UGN0-06821	1	04713	MC6821P	MC6821P PIA
R	1	RN55-11000	1	05905	SMA 0207 E 96	1 K OHMS 1% MET FILM
R	2	RN55-14750	1	05905	SMA 0207 E 96	4.75 K OHMS 1% MET FILM
R	3	RN55-14750	1	05905	SMA 0207 E 96	4.75 K OHMS 1% MET FILM
TP	1	ETST-06224	1	88245	1280B	TURRET TERMINAL
X	1	JSP0-10018	1	09922	DILB18P-108	18 PIN DIP SOCKET
X	2	JSP0-10018	1	09922	DILB18P-108	18 PIN DIP SOCKET
X	3	JSP0-10020	1	09922	DILB20P-108	20 PIN DIP SOCKET
X	4	JSPL-10040	1	09922	DILBQ40P-101	40 PIN DIP LOCK SOCKET
X	5	JSPL-10040	1	09922	DILBQ40P-101	40 PIN DIP LOCK SOCKET
X	5	JSPL-10040	1	09922	DILBQ40P-101	40 PIN DIP LOCK SOCKET

Parts List for MODULE SWITCHING ASSY No. 106CA03800 Rev. B

Item		Part Number	Qty	FSCM	Mfr's Part Number	Description
	1	106CF00800	1	58900	106CF00800	A6 PC BOARD
C	1	CC50-04100	1	56289	2CZ5U104X0050C4	.1 UF CERAMIC Z5U
C	2	CT10-06100	1	56289	150D106X9010B2	10 UF 10V TANTALUM
C	3	CC50-04100	1	56289	2CZ5U104X0050C4	.1 UF CERAMIC Z5U
C	4	CC50-04100	1	56289	2CZ5U104X0050C4	.1 UF CERAMIC Z5U
C	5	CC50-04100	1	56289	2CZ5U104X0050C4	.1 UF CERAMIC Z5U
C	6	CC50-04100	1	56289	2CZ5U104X0050C4	.1 UF CERAMIC Z5U
C	7	CT10-06100	1	56289	150D106X9010B2	10 UF 10V TANTALUM
C	8	CT10-06100	1	56289	150D106X9010B2	10 UF 10V TANTALUM
C	9	CC50-04100	1	56289	2CZ5U104X0050C4	.1 UF CERAMIC Z5U
IC	1	UCN0-00280	1	04713	MC14028BCP	MC14028BCP BCD/DECIMAL
IC	2	UON0-00074	1	01295	TL074CN	TL074CN QUAD FET OP AMP
IC	3	UON0-00074	1	01295	TL074CN	TL074CN QUAD FET OP AMP
IC	4	UON0-00074	1	01295	TL074CN	TL074CN QUAD FET OP AMP
IC	5	UON0-00324	1	27014	LM324N	LM324N QUAD OP AMP
IC	6	UON0-00324	1	27014	LM324N	LM324N QUAD OP AMP
IC	7	UTN0-02441	1	01295	SN74LS244N	SNL4LS244N 8X DRIV/RECV
IC	8	UCN0-00110	1	04713	MC14011BCP	MC14011BCP QUAD NAND
IC	9	UTN0-00321	1	01295	SN74LS32N	SN74LS32N QUAD OR
IC	10	UTN0-02441	1	01295	SN74LS244N	SNL4LS244N 8X DRIV/RECV
IC	11	101AC28411	1	58900	101AC28411	ADDRESS ROM A6-1
IC	12	UTN0-02441	1	01295	SN74LS244N	SNL4LS244N 8X DRIV/RECV
IC	13	UTN0-02452	1	18714	74HCT245E	74HCT245E 8X TRANSCEIVER
IC	14	UCN0-06522	1	55576	SYP6522	SYP6522 VIA
IC	15	UTN0-00041	1	01295	SN74LS04N	SN74LS04 HEX INVERTER
IC	16	UTN0-00170	1	01295	SN7417N	SN7417N HEX BUFFER
Q	1	QBNS-02222	1	27014	PN2222	PN2222 .5A 30V NPN
Q	2	QBPS-02907	1	27014	PN2907	PN2907 .5A 40V .6W PNP
Q	3	QBPS-02907	1	27014	PN2907	PN2907 .5A 40V .6W PNP
Q	4	QBNS-02222	1	27014	PN2222	PN2222 .5A 30V NPN
Q	5	QBPS-02907	1	27014	PN2907	PN2907 .5A 40V .6W PNP
Q	6	QBNS-02222	1	27014	PN2222	PN2222 .5A 30V NPN
Q	7	QBNS-02222	1	27014	PN2222	PN2222 .5A 30V NPN
Q	8	QBPS-02907	1	27014	PN2907	PN2907 .5A 40V .6W PNP
Q	9	QBPS-02907	1	27014	PN2907	PN2907 .5A 40V .6W PNP
Q	10	QBNS-02222	1	27014	PN2222	PN2222 .5A 30V NPN
Q	11	QBNS-02222	1	27014	PN2222	PN2222 .5A 30V NPN
Q	12	QBPS-02907	1	27014	PN2907	PN2907 .5A 40V .6W PNP
Q	13	QBNS-02222	1	27014	PN2222	PN2222 .5A 30V NPN
Q	14	QBPS-02907	1	27014	PN2907	PN2907 .5A 40V .6W PNP
Q	15	QBNS-02222	1	27014	PN2222	PN2222 .5A 30V NPN
Q	16	QBPS-02907	1	27014	PN2907	PN2907 .5A 40V .6W PNP
Q	17	QBNS-02222	1	27014	PN2222	PN2222 .5A 30V NPN
Q	18	QBPS-02907	1	27014	PN2907	PN2907 .5A 40V .6W PNP
Q	19	QBNS-02222	1	27014	PN2222	PN2222 .5A 30V NPN
Q	20	QBPS-02907	1	27014	PN2907	PN2907 .5A 40V .6W PNP
Q	21	QBNS-02222	1	27014	PN2222	PN2222 .5A 30V NPN
Q	22	QBPS-02907	1	27014	PN2907	PN2907 .5A 40V .6W PNP
Q	23	QBNS-02222	1	27014	PN2222	PN2222 .5A 30V NPN
Q	24	QBPS-02907	1	27014	PN2907	PN2907 .5A 40V .6W PNP
Q	25	QBNS-03643	1	27014	PN3643	PN3643 .5A 30V .6W NPN

Parts List for MODULE SWITCHING ASSY No. 106CA03800 Rev. B

Item	Part Number	Qty	FSCM	Mfr's Part Number	Description
R 1	RN55-00681	1	05905	SMA 0207 E 96	68.1 OHMS 1% MET FILM
R 2	RN55-00681	1	05905	SMA 0207 E 96	68.1 OHMS 1% MET FILM
R 3	RN55-03920	1	05905	SMA 0207 E 96	392 OHMS 1% MET FILM
R 4	RN55-05620	1	05905	SMA 0207 E 96	562 OHMS 1% MET FILM
R 5	RN55-05620	1	05905	SMA 0207 E 96	562 OHMS 1% MET FILM
R 6	RN55-05620	1	05905	SMA 0207 E 96	562 OHMS 1% MET FILM
R 7	RN55-05620	1	05905	SMA 0207 E 96	562 OHMS 1% MET FILM
R 8	RN55-05620	1	05905	SMA 0207 E 96	562 OHMS 1% MET FILM
R 9	RN55-21000	1	05905	SMA 0207 E 96	562 OHMS 1% MET FILM
R 10	RN55-14990	1	05905	SMA 0207 E 96	10 K OHMS 1% MET FILM
R 11	RN55-15620	1	05905	SMA 0207 E 96	4.99 K OHMS 1% MET FILM
R 12	RN55-21100	1	05905	SMA 0207 E 96	5.62 K OHMS 1% MET FILM
R 13	RN55-12210	1	05905	SMA 0207 E 96	11 K OHMS 1% MET FILM
R 14	RN55-14750	1	05905	SMA 0207 E 96	2.21 K OHMS 1% MET FILM
R 15	RN55-14750	1	05905	SMA 0207 E 96	4.75 K OHMS 1% MET FILM
R 16	RN55-14750	1	05905	SMA 0207 E 96	4.75 K OHMS 1% MET FILM
					4.75 K OHMS 1% MET FILM

Parts List for AM LEVEL CONTROL ASSY No. 101CA26200 Rev. C

Item		Part Number	Qty	FSCM	Mfr's Part Number	Description
	1	101CF26200	1	58900	101CF26200	AM LEVEL CONTROL BD
C	1	CC50-00220	1	52763	EDPT-22-NPO-5%	22 PF CERAMIC NPO
C	2	CC50-00220	1	52763	EDPT-22-NPO-5%	22 PF CERAMIC NPO
C	3	CC50-05100	1	56289	3CZ5U105X0050C5	1 UF CERAMIC Z5U
C	4	CT15-06220	1	56289	150D226X90015B2	22 UF 15V TANTALUM
C	5	CC50-03100	1	51642	150-100-W5R-103K	.01 UF CERAMIC X7R
C	7	CC50-04100	1	56289	2CZ5U104X0050C4	.1 UF CERAMIC Z5U
C	8	CC50-03100	1	51642	150-100-W5R-103K	.01 UF CERAMIC X7R
C	9	CT10-06390	1	56289	150D396X9010B2	39 UF 10V TANTALUM
C	10	CC50-04100	1	56289	2CZ5U104X0050C4	.1 UF CERAMIC Z5U
C	11	CC50-04100	1	56289	2CZ5U104X0050C4	.1 UF CERAMIC Z5U
C	12	CC50-04100	1	56289	2CZ5U104X0050C4	.1 UF CERAMIC Z5U
C	13	CC50-04100	1	56289	2CZ5U104X0050C4	.1 UF CERAMIC Z5U
C	14	CC50-05100	1	56289	3CZ5U105X0050C5	1 UF CERAMIC Z5U
C	16	CT20-06100	1	56289	150D106X9020B2	10 UF 20V TANTALUM
C	17	CC50-04100	1	56289	2CZ5U104X0050C4	.1 UF CERAMIC Z5U
C	18	CT15-06220	1	56289	150D226X90015B2	22 UF 15V TANTALUM
C	19	CT20-06100	1	56289	150D106X9020B2	10 UF 20V TANTALUM
C	20	CC50-04100	1	56289	2CZ5U104X0050C4	.1 UF CERAMIC Z5U
C	21	CC50-05100	1	56289	3CZ5U105X0050C5	1 UF CERAMIC Z5U
C	24	CT10-06390	1	56289	150D396X9010B2	39 UF 10V TANTALUM
C	25	CC50-05100	1	56289	3CZ5U105X0050C5	1 UF CERAMIC Z5U
C	26	CC50-04100	1	56289	2CZ5U104X0050C4	.1 UF CERAMIC Z5U
C	27	CC50-02100	1	52763	EDPT-1000-Y5P10%	.001 UF CERAMIC Y5P
C	28	CC50-02100	1	52763	EDPT-1000-Y5P10%	.001 UF CERAMIC Y5P
C	29	CC50-02100	1	52763	EDPT-1000-Y5P10%	.001 UF CERAMIC Y5P
C	30	CC50-02100	1	52763	EDPT-1000-Y5P10%	.001 UF CERAMIC Y5P
C	31	CC50-02100	1	52763	EDPT-1000-Y5P10%	.001 UF CERAMIC Y5P
C	32	CC50-02100	1	52763	EDPT-1000-Y5P10%	.001 UF CERAMIC Y5P
C	35	CC50-01470	1	51642	150-100-COG-471	470 PF CERAMIC NPO
C	36	CC50-?????	1	00000	XXXXX	SELECTED IN TEST
C	37	CC50-?????	1	00000	XXXXX	SELECTED IN TEST
C	38	CC50-?????	1	00000	XXXXX	SELECTED IN TEST
C	39	CC50-05100	1	56289	3CZ5U105X0050C5	1 UF CERAMIC Z5U
CR	2	DSA0-04148	1	07263	1N4148	IN4148 G.P. DIODE
CR	3	DSA0-04148	1	07263	1N4148	IN4148 G.P. DIODE
CR	4	DSA0-04148	1	07263	1N4148	IN4148 G.P. DIODE
CR	5	DSA0-04148	1	07263	1N4148	IN4148 G.P. DIODE
CR	6	DSA0-04148	1	07263	1N4148	IN4148 G.P. DIODE
CR	7	DSA0-04148	1	07263	1N4148	IN4148 G.P. DIODE
CR	8	DSA0-04148	1	07263	1N4148	IN4148 G.P. DIODE
CR	9	DSA0-04148	1	07263	1N4148	IN4148 G.P. DIODE
IC	1	UON0-00072	1	01295	TL072CP	TL072CP DUAL FET OP AMP
IC	2	UIN0-07542	1	24335	AD7542KN	AD7542KN 12 BIT D/A
IC	3	UON0-00072	1	01295	TL072CP	TL072CP DUAL FET OP AMP
IC	4	UIN0-07542	1	24335	AD7542KN	AD7542KN 12 BIT D/A
IC	5	UON0-00072	1	01295	TL072CP	TL072CP DUAL FET OP AMP
IC	6	UON0-00074	1	01295	TL074CN	TL074CN QUAD FET OP AMP
IC	7	ULN0-05010	1	32293	IH5010CPD	IH5010CPD SP4T SWITCH
IC	8	ULN0-05042	1	32293	IH5042CPE	IH5042CPE SPDT SWITCH
IC	9	UIN0-00571	1	24335	AD571JD	AD571JD 10 BIT A/D

Parts List for AM LEVEL CONTROL ASSY No. 101CA26200 Rev. C

Item	Part Number	Qty	FSCM	Mfr's Part Number	Description
IC 10	UCN0-05550	1	04713	MC14555BCP	MC14555BCP DUAL 1 OF 4
IC 11	UTN0-00001	1	01295	SN74LS00N	SN74LS00 QUAD NAND
IC 12	UTN0-00001	1	01295	SN74LS00N	SN74LS00 QUAD NAND
IC 13	ULN0-05018	1	32293	IH5018CPA	IH5018CPA SPDT SWITCH
IC 14	UTN0-01381	1	01295	SN74LS138N	SN74LS138N 3 TO 8 DEC
IC 15	UON0-00072	1	01295	TL072CP	TL072CP DUAL FET OP AMP
Q 1	QBNS-02222	1	27014	PN2222	PN2222 .5A 30V NPN
Q 2	QBNS-02222	1	27014	PN2222	PN2222 .5A 30V NPN
Q 3	QBPS-04258	1	27014	PN4258	PN4258 12V 700MHZ PNP
Q 4	QBNS-04275	1	27014	PN4275	PN4275 .1A 15V .6W NPN
Q 5	QBPS-04258	1	27014	PN4258	PN4258 12V 700MHZ PNP
Q 6	QBNS-04275	1	27014	PN4275	PN4275 .1A 15V .6W NPN
Q 7	QBPS-04258	1	27014	PN4258	PN4258 12V 700MHZ PNP
Q 8	QBNS-04275	1	27014	PN4275	PN4275 .1A 15V .6W NPN
Q 9	QBPS-04258	1	27014	PN4258	PN4258 12V 700MHZ PNP
Q 10	QBNS-04275	1	27014	PN4275	PN4275 .1A 15V .6W NPN
Q 11	QBPS-04258	1	27014	PN4258	PN4258 12V 700MHZ PNP
Q 12	QBNS-04275	1	27014	PN4275	PN4275 .1A 15V .6W NPN
Q 13	QBPS-04258	1	27014	PN4258	PN4258 12V 700MHZ PNP
Q 14	QBNS-04275	1	27014	PN4275	PN4275 .1A 15V .6W NPN
Q 15	QBPS-02907	1	27014	PN2907	PN2907 .5A 40V .6W PNP
Q 16	QBPS-02907	1	27014	PN2907	PN2907 .5A 40V .6W PNP
Q 17	QBPS-02907	1	27014	PN2907	PN2907 .5A 40V .6W PNP
Q 18	QBPS-02907	1	27014	PN2907	PN2907 .5A 40V .6W PNP
Q 19	QBNS-02222	1	27014	PN2222	PN2222 .5A 30V NPN
Q 20	QBNS-02222	1	27014	PN2222	PN2222 .5A 30V NPN
Q 21	QJNS-04091	1	04713	2N4091	2N4091 30OHM N CH JFET
R 1	RN55-14750	1	05905	SMA 0207 E 96	4.75 K OHMS 1% MET FILM
R 2	RN55-21000	1	05905	SMA 0207 E 96	10 K OHMS 1% MET FILM
R 3	RN55-21780	1	05905	SMA 0207 E 96	17.8 K OHMS 1% MET FILM
R 4	RN55-21100	1	05905	SMA 0207 E 96	11 K OHMS 1% MET FILM
R 5	RN55-11000	1	05905	SMA 0207 E 96	1 K OHMS 1% MET FILM
R 6	RN55-24320	1	05905	SMA 0207 E 96	43.2 K OHMS 1% MET FILM
R 7	RN55-24320	1	05905	SMA 0207 E 96	43.2 K OHMS 1% MET FILM
R 8	RN55-31000	1	05905	SMA 0207 E 96	100 K OHMS 1% MET FILM
R 9	RN55-31000	1	05905	SMA 0207 E 96	100 K OHMS 1% MET FILM
R 10	RN55-21000	1	05905	SMA 0207 E 96	10 K OHMS 1% MET FILM
R 11	RN55-31000	1	05905	SMA 0207 E 96	100 K OHMS 1% MET FILM
R 12	RN55-?????	1	00000	XXXXX	SELECTED IN TEST
R 13	RN55-22000	1	05905	SMA 0207 E 96	20 K OHMS 1% MET FILM
R 14	RN55-21000	1	05905	SMA 0207 E 96	10 K OHMS 1% MET FILM
R 16	RN55-12210	1	05905	SMA 0207 E 96	2.21 K OHMS 1% MET FILM
R 17	RN55-32000	1	05905	SMA 0207 E 96	200 K OHMS 1% MET FILM
R 18	RN55-33010	1	05905	SMA 0207 E 96	301 K OHMS 1% MET FILM
R 19	RN55-31000	1	05905	SMA 0207 E 96	100 K OHMS 1% MET FILM
R 20	RN55-31000	1	05905	SMA 0207 E 96	100 K OHMS 1% MET FILM
R 21	RN55-21000	1	05905	SMA 0207 E 96	10 K OHMS 1% MET FILM
R 22	RN55-21000	1	05905	SMA 0207 E 96	10 K OHMS 1% MET FILM
R 23	RN55-02210	1	05905	SMA 0207 E 96	221 OHMS 1% MET FILM
R 24	RN55-02210	1	05905	SMA 0207 E 96	221 OHMS 1% MET FILM
R 25	RN55-02210	1	05905	SMA 0207 E 96	221 OHMS 1% MET FILM

Parts List for AM LEVEL CONTROL ASSY No. 101CA26200 Rev. C

Item	Part Number	Qty	FSCM	Mfr's Part Number	Description
R 26	RN55-02210	1	05905	SMA 0207 E 96	221 OHMS 1% MET FILM
R 27	RN55-31500	1	05905	SMA 0207 E 96	150 K OHMS 1% MET FILM
R 28	RN55-31000	1	05905	SMA 0207 E 96	100 K OHMS 1% MET FILM
R 29	RAPD-22000	1	73138	89PR20K	20K POT 15T PC MNT
R 30	RAPD-22000	1	73138	89PR20K	20K POT 15T PC MNT
R 31	RN55-03320	1	05905	SMA 0207 E 96	332 OHMS 1% MET FILM
R 32	RN55-03320	1	05905	SMA 0207 E 96	332 OHMS 1% MET FILM
R 33	RN55-03320	1	05905	SMA 0207 E 96	332 OHMS 1% MET FILM
R 34	RN55-03920	1	05905	SMA 0207 E 96	392 OHMS 1% MET FILM
R 35	RN55-02740	1	05905	SMA 0207 E 96	274 OHMS 1% MET FILM
R 36	RN55-03320	1	05905	SMA 0207 E 96	332 OHMS 1% MET FILM
R 37	RN55-03920	1	05905	SMA 0207 E 96	392 OHMS 1% MET FILM
R 38	RN55-02740	1	05905	SMA 0207 E 96	274 OHMS 1% MET FILM
R 39	RN55-03320	1	05905	SMA 0207 E 96	332 OHMS 1% MET FILM
R 40	RN55-03920	1	05905	SMA 0207 E 96	392 OHMS 1% MET FILM
R 41	RN55-02740	1	05905	SMA 0207 E 96	274 OHMS 1% MET FILM
R 42	RN55-01500	1	05905	SMA 0207 E 96	150 OHMS 1% MET FILM
R 43	RN55-03920	1	05905	SMA 0207 E 96	392 OHMS 1% MET FILM
R 44	RN55-02740	1	05905	SMA 0207 E 96	274 OHMS 1% MET FILM
R 45	RN55-03320	1	05905	SMA 0207 E 96	332 OHMS 1% MET FILM
R 46	RN55-03920	1	05905	SMA 0207 E 96	392 OHMS 1% MET FILM
R 47	RN55-02740	1	05905	SMA 0207 E 96	274 OHMS 1% MET FILM
R 48	RN55-01500	1	05905	SMA 0207 E 96	150 OHMS 1% MET FILM
R 49	RN55-03920	1	05905	SMA 0207 E 96	392 OHMS 1% MET FILM
R 50	RN55-02740	1	05905	SMA 0207 E 96	274 OHMS 1% MET FILM
R 53	RN55-12210	1	05905	SMA 0207 E 96	2.21 K OHMS 1% MET FILM
R 54	RN55-12210	1	05905	SMA 0207 E 96	2.21 K OHMS 1% MET FILM
R 56	RN55-?????	1	00000	XXXXX	SELECTED IN TEST
R 57	RN55-?????	1	00000	XXXXX	SELECTED IN TEST
R 58	RN55-41000	1	05905	SMA 0207 E 96	1 M OHMS 1% MET FILM
R 59	RN55-15620	1	05905	SMA 0207 E 96	5.62 K OHMS 1% MET FILM
R 60	RN55-15620	1	05905	SMA 0207 E 96	5.62 K OHMS 1% MET FILM
R 61	RN55-01000	1	05905	SMA 0207 E 96	100 OHMS 1% MET FILM
R 62	RN55-01000	1	05905	SMA 0207 E 96	100 OHMS 1% MET FILM
R 63	RN55-21240	1	05905	SMA 0207 E 96	12.4 K OHMS 1% MET FILM.
R 64	RN55-24220	1	05905	SMA 0207 E 96	42.2 K OHMS 1% MET FILM
R 65	RN55-22800	1	05905	SMA 0207 E 96	28 K OHMS 1% MET FILM
R 66	RN55-03320	1	05905	SMA 0207 E 96	332 OHMS 1% MET FILM
R 67	RN55-03320	1	05905	SMA 0207 E 96	332 OHMS 1% MET FILM
R 68	RN55-25620	1	05905	SMA 0207 E 96	56.2 K OHMS 1% MET FILM
R 69	RN55-02210	1	05905	SMA 0207 E 96	221 OHMS 1% MET FILM
R 70	RN55-02210	1	05905	SMA 0207 E 96	221 OHMS 1% MET FILM
R 71	RN55-02210	1	05905	SMA 0207 E 96	221 OHMS 1% MET FILM
R 72	RN55-02210	1	05905	SMA 0207 E 96	221 OHMS 1% MET FILM
R 73	RN55-02210	1	05905	SMA 0207 E 96	221 OHMS 1% MET FILM
R 74	RN55-02210	1	05905	SMA 0207 E 96	221 OHMS 1% MET FILM
R 75	RN55-14750	1	05905	SMA 0207 E 96	4.75 K OHMS 1% MET FILM
R 76	RN55-14750	1	05905	SMA 0207 E 96	4.75 K OHMS 1% MET FILM
R 77	RN55-14750	1	05905	SMA 0207 E 96	4.75 K OHMS 1% MET FILM
R 78	RN55-14750	1	05905	SMA 0207 E 96	4.75 K OHMS 1% MET FILM
R 79	RN55-24990	1	05905	SMA 0207 E 96	49.9 K OHMS 1% MET FILM

Parts List for AM LEVEL CONTROL ASSY No. 101CA26200 Rev. C

Item	Part Number	Qty	FSCM	Mfr's Part Number	Description
R 80	RN55-21000	1	05905	SMA 0207 E 96	10 K OHMS 1% MET FILM
R 82	RC05-00220	1	01121	BB-220-5	22 OHMS 5% 1/8W CARBON
R 83	RC05-00220	1	01121	BB-220-5	22 OHMS 5% 1/8W CARBON
R 84	RN55-31000	1	05905	SMA 0207 E 96	100 K OHMS 1% MET FILM
R 85	RN55-01000	1	05905	SMA 0207 E 96	100 OHMS 1% MET FILM
TP 1	ETST-06224	1	88245	1280B	TURRET TERMINAL
VR 1	DRAE-00827	1	04713	1N827	IN827 6.2V REF. DIODE

arts List for 100 MHZ REF LOOP PC ASSY No. 101BA04900 Rev. H

Item		Part Number	Qty	FSCM	Mfr's Part Number	Description
	1	101BF04900	1	58900	101BF04900	100MHZ REFERENCE LOOP BD
	2	HQH0-0001Ø	1	Ø5820	651-B	IC HEATSINK
	3	ETST-06224	2	88245	1280B	TURRET TERMINAL
C	1	CT10-06390	1	56289	150D396X9010B2	39 UF 10V TANTALUM
C	2	CC50-05100	1	56289	3CZ5U105X0050C5	1 UF CERAMIC Z5U
C	3	CC50-03100	1	51642	150-100-W5R-103K	.01 UF CERAMIC X7R
C	4	CC50-03100	1	51642	150-100-W5R-103K	.01 UF CERAMIC X7R
C	5	CC50-02100	1	52763	EDPT-1000-Y5P10%	.001 UF CERAMIC Y5P
C	6	CC50-05100	1	56289	3CZ5U105X0050C5	1 UF CERAMIC Z5U
C	7	CC50-02100	1	52763	EDPT-1000-Y5P10%	.001 UF CERAMIC Y5P
C	8	CC50-02100	1	52763	EDPT-1000-Y5P10%	.001 UF CERAMIC Y5P
C	9	CC50-02100	1	52763	EDPT-1000-Y5P10%	.001 UF CERAMIC Y5P
C	10	CC50-05100	1	56289	3CZ5U105X0050C5	1 UF CERAMIC Z5U
C	11	CC50-05100	1	56289	3CZ5U105X0050C5	1 UF CERAMIC Z5U
C	12	CC50-05100	1	56289	3CZ5U105X0050C5	1 UF CERAMIC Z5U
C	13	CC50-02100	1	52763	EDPT-1000-Y5P10%	.001 UF CERAMIC Y5P
C	14	CC50-02100	1	52763	EDPT-1000-Y5P10%	.001 UF CERAMIC Y5P
C	15	CC50-02100	1	52763	EDPT-1000-Y5P10%	.001 UF CERAMIC Y5P
C	16	CT20-07100	1	56289	150D107X0020S2	100 UF 20V TANTALUM
C	17	CC50-05100	1	56289	3CZ5U105X0050C5	1 UF CERAMIC Z5U
CR	1	DSA0-04148	1	Ø7263	1N4148	IN4148 G.P. DIODE
CR	2	DSA0-04148	1	Ø7263	1N4148	IN4148 G.P. DIODE
CR	3	DSA0-04148	1	Ø7263	1N4148	IN4148 G.P. DIODE
CR	4	DSA0-04148	1	Ø7263	1N4148	IN4148 G.P. DIODE
CR	5	DSA0-04148	1	Ø7263	1N4148	IN4148 G.P. DIODE
DS	1	ILRR-00125	1	58361	MV5077B	RED LED 1/8" DIA
IC	1	UEN0-10124	1	Ø4713	MC10124P	MC10124P QUAD TTL TO ECL
IC	2	UTN0-00000	1	Ø1295	SN7400N	SN7400 QUAD NAND
IC	3	UEN0-12040	1	Ø4713	MC12040P	MC12040P PHASE/FREQ DET
IC	4	UON0-00072	1	Ø1295	TL072CP	TL072CP DUAL FET OP AMP
IC	5	UEN0-10102	1	Ø4713	MC10102P	MC10102P QUAD NOR
IC	6	UEN0-10131	1	Ø4713	MC10131P	MC10131P DUAL D F/F
IC	7	UEN0-10131	1	Ø4713	MC10131P	MC10131P DUAL D F/F
L	1	LAD0-06270	1	72259	WEE-27	27 UH INDUCTOR
Q	1	QBNS-04275	1	27014	PN4275	PN4275 .1A 15V .6W NPN
Q	2	QBNS-04275	1	27014	PN4275	PN4275 .1A 15V .6W NPN
Q	3	QBNS-04275	1	27014	PN4275	PN4275 .1A 15V .6W NPN
Q	4	QBNS-04275	1	27014	PN4275	PN4275 .1A 15V .6W NPN
Q	5	QBNS-02222	1	27014	PN2222	PN2222 .5A 30V NPN
Q	6	QBPS-02907	1	27014	PN2907	PN2907 .5A 40V .6W PNP
Q	7	QBNS-04275	1	27014	PN4275	PN4275 .1A 15V .6W NPN
R	1	RC20-00510	1	Ø1121	RC20GF510J	51 OHM 5% 1/2W CARBON
R	2	RN55-05620	1	Ø5905	SMA Ø207 E 96	562 OHMS 1% MET FILM
R	3	RN55-21000	1	Ø5905	SMA Ø207 E 96	10 K OHMS 1% MET FILM
R	4	RN55-21000	1	Ø5905	SMA Ø207 E 96	10 K OHMS 1% MET FILM
R	5	RN55-12210	1	Ø5905	SMA Ø207 E 96	2.21 K OHMS 1% MET FILM
R	6	RN55-11000	1	Ø5905	SMA Ø207 E 96	1 K OHMS 1% MET FILM
R	7	RN55-02740	1	Ø5905	SMA Ø207 E 96	274 OHMS 1% MET FILM
R	8	RN55-31000	1	Ø5905	SMA Ø207 E 96	100 K OHMS 1% MET FILM
R	9	RN55-11000	1	Ø5905	SMA Ø207 E 96	1 K OHMS 1% MET FILM
R	10	RN55-15620	1	Ø5905	SMA Ø207 E 96	5.62 K OHMS 1% MET FILM

arts List for 100 MHZ REF LOOP PC ASSY No. 101BA04900 Rev. H

Item	Part Number	Qty	FSCM	Mfr's Part Number	Description
R 11	RN55-02740	1	05905	SMA 0207 E 96	274 OHMS 1% MET FILM
R 12	RN55-05620	1	05905	SMA 0207 E 96	562 OHMS 1% MET FILM
R 13	RN55-05620	1	05905	SMA 0207 E 96	562 OHMS 1% MET FILM
R 14	RN55-32740	1	05905	SMA 0207 E 96	274 K OHMS 1% MET FILM
R 15	RN55-24750	1	05905	SMA 0207 E 96	47.5 K OHMS 1% MET FILM
R 16	RN55-24750	1	05905	SMA 0207 E 96	47.5 K OHMS 1% MET FILM
R 17	RN55-32740	1	05905	SMA 0207 E 96	274 K OHMS 1% MET FILM
R 18	RN55-05620	1	05905	SMA 0207 E 96	562 OHMS 1% MET FILM
R 19	RN55-05620	1	05905	SMA 0207 E 96	562 OHMS 1% MET FILM
R 20	RN55-05620	1	05905	SMA 0207 E 96	562 OHMS 1% MET FILM
R 21	RN55-05620	1	05905	SMA 0207 E 96	562 OHMS 1% MET FILM
R 22	RN55-25620	1	05905	SMA 0207 E 96	56.2 K OHMS 1% MET FILM
R 23	RN55-05620	1	05905	SMA 0207 E 96	562 OHMS 1% MET FILM
R 24	RN55-21210	1	05905	SMA 0207 E 96	12.1 K OHMS 1% MET FILM
R 25	RN55-12740	1	05905	SMA 0207 E 96	2.74 K OHMS 1% MET FILM
R 26	RN55-21000	1	05905	SMA 0207 E 96	10 K OHMS 1% MET FILM
R 27	RN55-03320	1	05905	SMA 0207 E 96	332 OHMS 1% MET FILM
R 28	RN55-01300	1	05905	SMA 0207 E 96	130 OHMS 1% MET FILM
R 29	RN55-00825	1	05905	SMA 0207 E 96	82.5 OHMS 1% MET FILM
R 30	RN55-11000	1	05905	SMA 0207 E 96	1 K OHMS 1% MET FILM
R 31	RN55-00100	1	05905	SMA 0207 E 96	10 OHMS 1% MET FILM
R 32	RN55-21000	1	05905	SMA 0207 E 96	10 K OHMS 1% MET FILM
R 33	RN55-21000	1	05905	SMA 0207 E 96	10 K OHMS 1% MET FILM
R 34	RN55-21000	1	05905	SMA 0207 E 96	10 K OHMS 1% MET FILM

Parts List for FM OUTPUT PLL ASSY No. 105BA10500 Rev. B

Item		Part Number	Qty	FSCM	Mfr's Part Number	Description
	1	105BF10500	1	58900	105BF10500	FM OUTPUT PLL BD
	2	ETST-06224	2	88245	1280B	TURRET TERMINAL
C	1	CC50-?????	1	51642	150-100-COG-???J	SELECTED IN TEST
C	2	CC50-?????	1	51642	150-100-COG-???J	SELECTED IN TEST
C	3	CC50-?????	1	51642	150-100-COG-???J	SELECTED IN TEST
C	4	CC50-?????	1	51642	150-100-COG-???J	SELECTED IN TEST
C	5	CC50-05100	1	56289	3CZ5U105X0050C5	1 UF CERAMIC Z5U
C	6	CC50-05100	1	56289	3CZ5U105X0050C5	1 UF CERAMIC Z5U
C	7	CC50-05100	1	56289	3CZ5U105X0050C5	1 UF CERAMIC Z5U
C	8	CC50-?????	1	51642	150-100-COG-???J	SELECTED IN TEST
C	9	CC50-?????	1	51642	150-100-COG-???J	SELECTED IN TEST
C	10	CC50-05100	1	56289	3CZ5U105X0050C5	1 UF CERAMIC Z5U
C	11	CC50-01220	1	51642	150-100-COG-221	220 PF CERAMIC NPO
C	13	CC50-05100	1	56289	3CZ5U105X0050C5	1 UF CERAMIC Z5U
C	14	CC50-05100	1	56289	3CZ5U105X0050C5	1 UF CERAMIC Z5U
C	18	CC50-05100	1	56289	3CZ5U105X0050C5	1 UF CERAMIC Z5U
C	19	CC50-03100	1	51642	150-100-W5R-103K	.01 UF CERAMIC X7R
C	20	CC50-01220	1	51642	150-100-COG-221	220 PF CERAMIC NPO
C	21	CC50-05100	1	56289	3CZ5U105X0050C5	1 UF CERAMIC Z5U
C	21	CC50-05100	1	56289	3CZ5U105X0050C5	1 UF CERAMIC Z5U
C	23	CC50-?????	1	51642	150-100-COG-???J	SELECTED IN TEST
C	24	CC50-03100	1	51642	150-100-W5R-103K	.01 UF CERAMIC X7R
C	25	CC50-03100	1	51642	150-100-W5R-103K	.01 UF CERAMIC X7R
C	26	CC50-03100	1	51642	150-100-W5R-103K	.01 UF CERAMIC X7R
C	27	CC50-05100	1	56289	3CZ5U105X0050C5	1 UF CERAMIC Z5U
C	28	CC50-05100	1	56289	3CZ5U105X0050C5	1 UF CERAMIC Z5U
C	29	CC50-01100	1	51642	150-100-COG-101J	100 PF CERAMIC NPO
C	30	CC50-05100	1	56289	3CZ5U105X0050C5	1 UF CERAMIC Z5U
C	31	CC50-05100	1	56289	3CZ5U105X0050C5	1 UF CERAMIC Z5U
C	32	CC50-05100	1	56289	3CZ5U105X0050C5	1 UF CERAMIC Z5U
C	33	CC50-03100	1	51642	150-100-W5R-103K	.01 UF CERAMIC X7R
CR	1	DSA0-04148	1	07263	1N4148	IN4148 G.P. DIODE
CR	2	DSA0-04148	1	07263	1N4148	IN4148 G.P. DIODE
CR	3	DSA0-04148	1	07263	1N4148	IN4148 G.P. DIODE
CR	4	DSA0-04148	1	07263	1N4148	IN4148 G.P. DIODE
DS	1	ILRR-00125	1	58361	MV5077B	RED LED 1/8" DIA
IC	1	UON0-00070	1	01295	TL070CP	TL070 FET OP AMP
IC	2	UON0-00070	1	01295	TL070CP	TL070 FET OP AMP
IC	3	UON0-00070	1	01295	TL070CP	TL070 FET OP AMP
IC	4	ULN0-05043	1	32293	IH5043CPA	IH5043CPA DUAL SPDT SW
IC	5	UON0-00072	1	01295	TL072CP	TL072CP DUAL FET OP AMP
IC	6	UON0-00074	1	01295	TL074CN	TL074CN QUAD FET OP AMP
IC	7	UEN0-12040	1	04713	MC12040P	MC12040P PHASE/FREQ DET
IC	8	UTN0-03901	1	01295	SN74LS390N	SN74LS390N DUAL COUNTER
Q	1	QBNS-02222	1	27014	PN2222	PN2222 .5A 30V NPN
Q	2	QBNS-02222	1	27014	PN2222	PN2222 .5A 30V NPN
Q	3	QBNS-03643	1	27014	PN3643	PN3643 .5A 30V .6W NPN
R	1	RN55-12430	1	05905	SMA 0207 E 96	2.43 K OHMS 1% MET FILM
R	2	RN55-11210	1	05905	SMA 0207 E 96	1.21 K OHMS 1% MET FILM
R	3	RN55-12210	1	05905	SMA 0207 E 96	2.21 K OHMS 1% MET FILM
R	4	RN55-12210	1	05905	SMA 0207 E 96	2.21 K OHMS 1% MET FILM

Parts List for FM OUTPUT PLL ASSY No. 105BA10500 Rev. B

Item	Part Number	Qty	FSCM	Mfr's Part Number	Description
R 6	RN55-11000	1	05905	SMA 0207 E 96	1 K OHMS 1% MET FILM
R 8	RAPD-25000	1	73138	89PR50K	50K POT 15T PC MNT
R 9	RN55-22740	1	05905	SMA 0207 E 96	27.4 K OHMS 1% MET FILM
R 10	RN55-12210	1	05905	SMA 0207 E 96	2.21 K OHMS 1% MET FILM
R 11	RN55-31500	1	05905	SMA 0207 E 96	150 K OHMS 1% MET FILM
R 12	RAPD-22000	1	73138	89PR20K	20K POT 15T PC MNT
R 13	RC07-42200	1	01121	CB-225-5	2.2 MEG 5% 1/4W CARBON
R 14	RN55-19090	1	05905	SMA 0207 E 96	9.09 K OHMS 1% MET FILM
R 15	RN55-16810	1	05905	SMA 0207 E 96	6.81 K OHMS 1% MET FILM
R 16	RN55-12740	1	05905	SMA 0207 E 96	2.74 K OHMS 1% MET FILM
R 17	RN55-19090	1	05905	SMA 0207 E 96	9.09 K OHMS 1% MET FILM
R 18	RN55-22210	1	05905	SMA 0207 E 96	22.1 K OHMS 1% MET FILM
R 19	RC05-25600	1	01121	BB-563-5	56K; 5% 1/8W CARBON
R 20	RC05-11000	1	01121	BB-102-5	1.0K; 5% 1/8W CARBON
R 21	RC05-25600	1	01121	BB-563-5	56K; 5% 1/8W CARBON
R 22	RC05-21200	1	01121	BB-123-5	12K; 5% 1/8W CARBON
R 24	RN55-11000	1	05905	SMA 0207 E 96	1 K OHMS 1% MET FILM
R 25	RC05-22700	1	01121	BB-273-5	27K; 5% 1/8W CARBON
R 26	RC05-22700	1	01121	BB-273-5	27K; 5% 1/8W CARBON
R 27	RC05-21000	1	01121	BB-103-5	10K; 5% 1/8W CARBON
R 28	RC05-16200	1	01121	BB-622-5	6.2K; 5% 1/8W CARBON
R 29	RC05-31600	1	01121	BB-164-5	160K; 5% 1/8W CARBON
R 30	RC05-31600	1	01121	BB-164-5	160K; 5% 1/8W CARBON
R 32	RC05-21500	1	01121	BB-153-5	15K; 5% 1/8W CARBON
R 33	RC05-21500	1	01121	BB-153-5	15K; 5% 1/8W CARBON
R 34	RC05-01300	1	01121	BB-131-5	130ohms;5% 1/8W CARBON
R 35	RC05-00820	1	01121	BB-820-5	82 ohms;5% 1/8W CARBON
R 36	RN55-21000	1	05905	SMA 0207 E 96	10 K OHMS 1% MET FILM
R 37	RN55-21000	1	05905	SMA 0207 E 96	10 K OHMS 1% MET FILM
R 38	RN55-21000	1	05905	SMA 0207 E 96	10 K OHMS 1% MET FILM
R 39	RC05-21000	1	01121	BB-103-5	10K; 5% 1/8W CARBON
R 40	RC05-12400	1	01121	BB-242-5	2.4K; 5% 1/8W CARBON
R 41	RC05-11500	1	01121	BB-152-5	1.5K; 5% 1/8W CARBON
R 42	RC05-12200	1	01121	BB-222-5	2.2K; 5% 1/8W CARBON
R 43	RC05-11000	1	01121	BB-102-5	1.0K; 5% 1/8W CARBON
R 44	RC05-21000	1	01121	BB-103-5	10K; 5% 1/8W CARBON
RM 1	RM7S-05600	1	71450	750-81-R560	560 OHM X 7 SIP NETWRK
VR 1	DZAC-05228	1	04713	1N5228	IN5228 3.9 V ZENER
VR 2	DZAC-05228	1	04713	1N5228	IN5228 3.9 V ZENER

Parts List for SWP YIG DRIV 18-26 ASSY No. 101BA28205 Rev. E

Item		Part Number	Qty	FSCM	Mfr's Part Number	Description
	1	101BF28200	1	58900	101BF28200	YIG DRIVER BD
C	1	CC50-04100	1	56289	2CZ5U104X0050C4	.1 UF CERAMIC Z5U
C	2	CC50-04100	1	56289	2CZ5U104X0050C4	.1 UF CERAMIC Z5U
C	3	CC50-05100	1	56289	3CZ5U105X0050C5	1 UF CERAMIC Z5U
C	4	CC50-05100	1	56289	3CZ5U105X0050C5	1 UF CERAMIC Z5U
C	5	CC50-05100	1	56289	3CZ5U105X0050C5	1 UF CERAMIC Z5U
C	6	CC50-03100	1	51642	150-100-W5R-103K	.01 UF CERAMIC X7R
C	7	CC50-03100	1	51642	150-100-W5R-103K	.01 UF CERAMIC X7R
C	8	CC50-03100	1	51642	150-100-W5R-103K	.01 UF CERAMIC X7R
C	9	CC50-02100	1	52763	EDPT-1000-Y5P10%	.001 UF CERAMIC Y5P
C	10	CC50-03100	1	51642	150-100-W5R-103K	.01 UF CERAMIC X7R
C	11	CC50-04100	1	56289	2CZ5U104X0050C4	.1 UF CERAMIC Z5U
C	12	CC50-03100	1	51642	150-100-W5R-103K	.01 UF CERAMIC X7R
C	13	CC50-03100	1	51642	150-100-W5R-103K	.01 UF CERAMIC X7R
C	14	CC50-05100	1	56289	3CZ5U105X0050C5	1 UF CERAMIC Z5U
C	15	CC50-05100	1	56289	3CZ5U105X0050C5	1 UF CERAMIC Z5U
C	16	CC50-03100	1	51642	150-100-W5R-103K	.01 UF CERAMIC X7R
C	17	CC50-03100	1	51642	150-100-W5R-103K	.01 UF CERAMIC X7R
C	18	CC50-03100	1	51642	150-100-W5R-103K	.01 UF CERAMIC X7R
C	19	CC50-02100	1	52763	EDPT-1000-Y5P10%	.001 UF CERAMIC Y5P
C	20	CC50-03220	1	51642	150-100-W5R-223K	.022 UF CERAMIC X7R
C	21	CC50-03100	1	51642	150-100-W5R-103K	.01 UF CERAMIC X7R
C	22	CC50-05100	1	56289	3CZ5U105X0050C5	1 UF CERAMIC Z5U
C	23	CC50-00470	1	52763	EDPT-47-NPO-5%	47 PF CERAMIC NPO
CR	1	DSA0-04148	1	07263	1N4148	IN4148 G.P. DIODE
CR	2	DSA0-04148	1	07263	1N4148	IN4148 G.P. DIODE
CR	3	DSA0-04148	1	07263	1N4148	IN4148 G.P. DIODE
IC	1	UOG0-00027	1	24355	AD OP27GH	OP27GH LOW DRIFT OP AMP
IC	2	UIN0-07542	1	24355	AD7542KN	AD7542KN 12 BIT D/A
IC	3	UIN0-07542	1	24355	AD7542KN	AD7542KN 12 BIT D/A
IC	4	UOG0-00027	1	24355	AD OP27GH	OP27GH LOW DRIFT OP AMP
IC	5	UCN0-00110	1	04713	MC14011BCP	MC14011BCP QUAD NAND
IC	6	UOG0-00027	1	24355	AD OP27GH	OP27GH LOW DRIFT OP AMP
IC	7	UON0-00072	1	01295	TL072CP	TL072CP DUAL FET OP AMP
IC	8	URP0-79120	1	04713	MC79L12CP	MC79L12 .1A -12V REG
IC	9	URP0-78120	1	04713	MC78L12CP	MC78L12CP .1A 12V REG
Q	1	QBNS-02222	1	27014	PN2222	PN2222 .5A 30V NPN
Q	2	QJNS-04091	1	04713	2N4091	2N4091 30OHM N CH JFET
Q	3	QBNS-00012	1	04713	MPSA12	MPSA12 20K HFE NPN
Q	4	QBPS-03645	1	27014	PN3645	PN3645 .5A 60V .6W PNP
R	1	RN55-18250	1	05905	SMA 0207 E 96	8.25 K OHMS 1% MET FILM
R	2	RAPD-21000	1	73138	89PR10K	10K POT 15T PC MNT
R	3	RN55-31000	1	05905	SMA 0207 E 96	100 K OHMS 1% MET FILM
R	4	RN55-18250	1	05905	SMA 0207 E 96	8.25 K OHMS 1% MET FILM
R	5	RN55-?????	1	05905	SMA 0207 E 96	SELECTED IN TEST
R	6	RN55-31000	1	05905	SMA 0207 E 96	100 K OHMS 1% MET FILM
R	7	RN55-23650	1	05905	SMA 0207 E 96	36.5 K OHMS 1% MET FILM
R	8	RN55-21270	1	05905	SMA 0207 E 96	12.7 K OHMS 1% MET FILM
R	9	RN55-11000	1	05905	SMA 0207 E 96	1 K OHMS 1% MET FILM
R	10	RAPD-11000	1	73138	89PR1K	1K POT 15T PC MNT
R	11	RN55-12740	1	05905	SMA 0207 E 96	2.74 K OHMS 1% MET FILM

Parts List for SWP YIG DRIV 18-26 ASSY No. 101BA28205 Rev. E

Item	Part Number	Qty	FSCM	Mfr's Part Number	Description
R 12	RN55-11000	1	05905	SMA 0207 E 96	1 K OHMS 1% MET FILM
R 13	RAPD-12000	1	73138	89PR2K	2K POT 15T PC MNT
R 14	RN55-21000	1	05905	SMA 0207 E 96	10 K OHMS 1% MET FILM
R 15	RN55-21000	1	05905	SMA 0207 E 96	10 K OHMS 1% MET FILM
R 16	RN55-25620	1	05905	SMA 0207 E 96	56.2 K OHMS 1% MET FILM
R 17	RN55-25620	1	05905	SMA 0207 E 96	56.2 K OHMS 1% MET FILM
R 18	RN55-02210	1	05905	SMA 0207 E 96	221 OHMS 1% MET FILM
R 19	RN55-15620	1	05905	SMA 0207 E 96	5.62 K OHMS 1% MET FILM
R 20	RN55-14990	1	05905	SMA 0207 E 96	4.99 K OHMS 1% MET FILM
R 21	RN55-11000	1	05905	SMA 0207 E 96	1 K OHMS 1% MET FILM
R 22	RN55-14990	1	05905	SMA 0207 E 96	4.99 K OHMS 1% MET FILM
R 23	RN55-31000	1	05905	SMA 0207 E 96	100 K OHMS 1% MET FILM
R 24	RN55-31240	1	05905	SMA 0207 E 96	124 K OHMS 1% MET FILM
R 25	RN55-21500	1	05905	SMA 0207 E 96	15 K OHMS 1% MET FILM
R 26	RN55-21000	1	05905	SMA 0207 E 96	10 K OHMS 1% MET FILM
R 27	RN55-01000	1	05905	SMA 0207 E 96	100 OHMS 1% MET FILM
R 28	RN55-21000	1	05905	SMA 0207 E 96	10 K OHMS 1% MET FILM
VR 1	DRAE-00827	1	04713	1N827	IN827 6.2V REF. DIODE

Parts List for SWP YIG DRIVER 2-8 ASY No. 101BA28202 Rev. E

Item		Part Number	Qty	FSCM	Mfr's Part Number	Description
	1	101BF28200	1	58900	101BF28200	YIG DRIVER BD
C	1	CC50-04100	1	56289	2CZ5U104X0050C4	.1 UF CERAMIC Z5U
C	2	CC50-04100	1	56289	2CZ5U104X0050C4	.1 UF CERAMIC Z5U
C	3	CC50-05100	1	56289	3CZ5U105X0050C5	1 UF CERAMIC Z5U
C	4	CC50-05100	1	56289	3CZ5U105X0050C5	1 UF CERAMIC Z5U
C	5	CC50-05100	1	56289	3CZ5U105X0050C5	1 UF CERAMIC Z5U
C	6	CC50-03100	1	51642	150-100-W5R-103K	.01 UF CERAMIC X7R
C	7	CC50-03100	1	51642	150-100-W5R-103K	.01 UF CERAMIC X7R
C	8	CC50-03100	1	51642	150-100-W5R-103K	.01 UF CERAMIC X7R
C	9	CC50-02100	1	52763	EDPT-1000-Y5P10%	.001 UF CERAMIC Y5P
C	10	CC50-03100	1	51642	150-100-W5R-103K	.01 UF CERAMIC X7R
C	11	CC50-04100	1	56289	2CZ5U104X0050C4	.1 UF CERAMIC Z5U
C	12	CC50-03100	1	51642	150-100-W5R-103K	.01 UF CERAMIC X7R
C	13	CC50-03100	1	51642	150-100-W5R-103K	.01 UF CERAMIC X7R
C	14	CC50-05100	1	56289	3CZ5U105X0050C5	1 UF CERAMIC Z5U
C	15	CC50-05100	1	56289	3CZ5U105X0050C5	1 UF CERAMIC Z5U
C	16	CC50-03100	1	51642	150-100-W5R-103K	.01 UF CERAMIC X7R
C	17	CC50-03100	1	51642	150-100-W5R-103K	.01 UF CERAMIC X7R
C	18	CC50-03100	1	51642	150-100-W5R-103K	.01 UF CERAMIC X7R
C	19	CC50-02100	1	52763	EDPT-1000-Y5P10%	.001 UF CERAMIC Y5P
C	20	CC50-03220	1	51642	150-100-W5R-223K	.022 UF CERAMIC X7R
C	21	CC50-03100	1	51642	150-100-W5R-103K	.01 UF CERAMIC X7R
C	22	CC50-05100	1	56289	3CZ5U105X0050C5	1 UF CERAMIC Z5U
C	23	CC50-00470	1	52763	EDPT-47-NPO-5%	47 PF CERAMIC NPO
CR	1	DSA0-04148	1	07263	1N4148	IN4148 G.P. DIODE
CR	2	DSA0-04148	1	07263	1N4148	IN4148 G.P. DIODE
CR	3	DSA0-04148	1	07263	1N4148	IN4148 G.P. DIODE
IC	1	UOG0-00027	1	24355	AD OP27GH	OP27GH LOW DRIFT OP AMP
IC	2	UIN0-07542	1	24355	AD7542KN	AD7542KN 12 BIT D/A
IC	3	UIN0-07542	1	24355	AD7542KN	AD7542KN 12 BIT D/A
IC	4	UOG0-00027	1	24355	AD OP27GH	OP27GH LOW DRIFT OP AMP
IC	5	UCN0-00110	1	04713	MC14011BCP	MC14011BCP QUAD NAND
IC	6	UOG0-00027	1	24355	AD OP27GH	OP27GH LOW DRIFT OP AMP
IC	7	UON0-00072	1	01295	TL072CP	TL072CP DUAL FET OP AMP
IC	8	URP0-79120	1	04713	MC79L12CP	MC79L12 .1A -12V REG
IC	9	URP0-78120	1	04713	MC78L12CP	MC78L12CP .1A 12V REG
Q	1	QBNS-02222	1	27014	PN2222	PN2222 .5A 30V NPN
Q	2	QJNS-04091	1	04713	2N4091	2N4091 30OHM N CH JFET
Q	3	QBNS-00012	1	04713	MPSA12	MPSA12 20K HFE NPN
Q	4	QBPS-03645	1	27014	PN3645	PN3645 .5A 60V .6W PNP
R	1	RN55-18250	1	05905	SMA 0207 E 96	8.25 K OHMS 1% MET FILM
R	2	RAPD-21000	1	73138	89PR10K	10K POT 15T PC MNT
R	3	RN55-31000	1	05905	SMA 0207 E 96	100 K OHMS 1% MET FILM
R	4	RN55-18250	1	05905	SMA 0207 E 96	8.25 K OHMS 1% MET FILM
R	5	RN55-24750	1	05905	SMA 0207 E 96	47.5 K OHMS 1% MET FILM
R	6	RN55-31000	1	05905	SMA 0207 E 96	100 K OHMS 1% MET FILM
R	7	RN55-22670	1	05905	SMA 0207 E 96	26.7 K OHMS 1% MET FILM
R	8	RN55-22100	1	05905	SMA 0207 E 96	21 K OHMS 1% MET FILM
R	9	RN55-11000	1	05905	SMA 0207 E 96	1 K OHMS 1% MET FILM
R	10	RAPD-11000	1	73138	89PR1K	1K POT 15T PC MNT
R	11	RN55-11500	1	05905	SMA 0207 E 96	1.5 K OHMS 1% MET FILM

Parts List for SWP YIG DRIVER 2-8 ASY No. 101BA28202 Rev. E

Item	Part Number	Qty	FSCM	Mfr's Part Number	Description
R 12	RN55-11000	1	05905	SMA 0207 E 96	1 K OHMS 1% MET FILM
R 13	RAPD-12000	1	73138	89PR2K	2K POT 15T PC MNT
R 14	RN55-21000	1	05905	SMA 0207 E 96	10 K OHMS 1% MET FILM
R 15	RN55-21000	1	05905	SMA 0207 E 96	10 K OHMS 1% MET FILM
R 16	RN55-25620	1	05905	SMA 0207 E 96	56.2 K OHMS 1% MET FILM
R 17	RN55-25620	1	05905	SMA 0207 E 96	56.2 K OHMS 1% MET FILM
R 18	RN55-02210	1	05905	SMA 0207 E 96	221 OHMS 1% MET FILM
R 19	RN55-15620	1	05905	SMA 0207 E 96	5.62 K OHMS 1% MET FILM
R 20	RN55-14990	1	05905	SMA 0207 E 96	4.99 K OHMS 1% MET FILM
R 21	RN55-11000	1	05905	SMA 0207 E 96	1 K OHMS 1% MET FILM
R 22	RN55-14990	1	05905	SMA 0207 E 96	4.99 K OHMS 1% MET FILM
R 23	RN55-31000	1	05905	SMA 0207 E 96	100 K OHMS 1% MET FILM
R 24	RN55-31240	1	05905	SMA 0207 E 96	124 K OHMS 1% MET FILM
R 25	RN55-21500	1	05905	SMA 0207 E 96	15 K OHMS 1% MET FILM
R 26	RN55-21000	1	05905	SMA 0207 E 96	10 K OHMS 1% MET FILM
R 27	RN55-01000	1	05905	SMA 0207 E 96	100 OHMS 1% MET FILM
R 28	RN55-21000	1	05905	SMA 0207 E 96	10 K OHMS 1% MET FILM
VR 1	DRAE-00827	1	04713	1N827	IN827 6.2V REF. DIODE

Parts List for SWP YIG DRIV 12-18 ASSY No. 101BA28204 Rev. E

Item		Part Number	Qty	FSCM	Mfr's Part Number	Description
	1	101BF28200	1	58900	101BF28200	YIG DRIVER BD
C	1	CC50-04100	1	56289	2CZ5U104X0050C4	.1 UF CERAMIC Z5U
C	2	CC50-04100	1	56289	2CZ5U104X0050C4	.1 UF CERAMIC Z5U
C	3	CC50-05100	1	56289	3CZ5U105X0050C5	1 UF CERAMIC Z5U
C	4	CC50-05100	1	56289	3CZ5U105X0050C5	1 UF CERAMIC Z5U
C	5	CC50-05100	1	56289	3CZ5U105X0050C5	1 UF CERAMIC Z5U
C	6	CC50-03100	1	51642	150-100-W5R-103K	.01 UF CERAMIC X7R
C	7	CC50-03100	1	51642	150-100-W5R-103K	.01 UF CERAMIC X7R
C	8	CC50-03100	1	51642	150-100-W5R-103K	.01 UF CERAMIC X7R
C	9	CC50-02100	1	52763	EDPT-1000-Y5P10%	.001 UF CERAMIC Y5P
C	10	CC50-03100	1	51642	150-100-W5R-103K	.01 UF CERAMIC X7R
C	11	CC50-04100	1	56289	2CZ5U104X0050C4	.1 UF CERAMIC Z5U
C	12	CC50-03100	1	51642	150-100-W5R-103K	.01 UF CERAMIC X7R
C	13	CC50-03100	1	51642	150-100-W5R-103K	.01 UF CERAMIC X7R
C	14	CC50-05100	1	56289	3CZ5U105X0050C5	1 UF CERAMIC Z5U
C	15	CC50-05100	1	56289	3CZ5U105X0050C5	1 UF CERAMIC Z5U
C	16	CC50-03100	1	51642	150-100-W5R-103K	.01 UF CERAMIC X7R
C	17	CC50-03100	1	51642	150-100-W5R-103K	.01 UF CERAMIC X7R
C	18	CC50-03100	1	51642	150-100-W5R-103K	.01 UF CERAMIC X7R
C	19	CC50-02100	1	52763	EDPT-1000-Y5P10%	.001 UF CERAMIC Y5P
C	20	CC50-03220	1	51642	150-100-W5R-223K	.022 UF CERAMIC X7R
C	21	CC50-03100	1	51642	150-100-W5R-103K	.01 UF CERAMIC X7R
C	22	CC50-05100	1	56289	3CZ5U105X0050C5	1 UF CERAMIC Z5U
C	23	CC50-00470	1	52763	EDPT-47-NPO-5%	47 PF CERAMIC NPO
CR	1	DSA0-04148	1	07263	1N4148	IN4148 G.P. DIODE
CR	2	DSA0-04148	1	07263	1N4148	IN4148 G.P. DIODE
CR	3	DSA0-04148	1	07263	1N4148	IN4148 G.P. DIODE
IC	1	UOG0-00027	1	24355	AD OP27GH	OP27GH LOW DRIFT OP AMP
IC	2	UIN0-07542	1	24355	AD7542KN	AD7542KN 12 BIT D/A
IC	3	UIN0-07542	1	24355	AD7542KN	AD7542KN 12 BIT D/A
IC	4	UOG0-00027	1	24355	AD OP27GH	OP27GH LOW DRIFT OP AMP
IC	5	UCN0-00110	1	04713	MC14011BCP	MC14011BCP QUAD NAND
IC	6	UOG0-00027	1	24355	AD OP27GH	OP27GH LOW DRIFT OP AMP
IC	7	UON0-00072	1	01295	TL072CP	TL072CP DUAL FET OP AMP
IC	8	URP0-79120	1	04713	MC79L12CP	MC79L12 .1A -12V REG
IC	9	URP0-78120	1	04713	MC78L12CP	MC78L12CP .1A 12V REG
Q	1	QBNS-02222	1	27014	PN2222	PN2222 .5A 30V NPN
Q	2	QJNS-04091	1	04713	2N4091	2N4091 30OHM N CH JFET
Q	3	QBNS-00012	1	04713	MPSA12	MPSA12 20K HFE NPN
Q	4	QBPS-03645	1	27014	PN3645	PN3645 .5A 60V .6W PNP
R	1	RN55-18250	1	05905	SMA 0207 E 96	8.25 K OHMS 1% MET FILM
R	2	RAPD-21000	1	73138	89PR10K	10K POT 15T PC MNT
R	3	RN55-31000	1	05905	SMA 0207 E 96	100 K OHMS 1% MET FILM
R	4	RN55-18250	1	05905	SMA 0207 E 96	8.25 K OHMS 1% MET FILM
R	5	RN55-25360	1	05905	SMA 0207 E 96	53.6 K OHMS 1% MET FILM
R	6	RN55-31000	1	05905	SMA 0207 E 96	100 K OHMS 1% MET FILM
R	7	RN55-22670	1	05905	SMA 0207 E 96	26.7 K OHMS 1% MET FILM
R	8	RN55-21000	1	05905	SMA 0207 E 96	10 K OHMS 1% MET FILM
R	9	RN55-12210	1	05905	SMA 0207 E 96	2.21 K OHMS 1% MET FILM
R	10	RAPD-11000	1	73138	89PR1K	1K POT 15T PC MNT
R	11	RN55-16190	1	05905	SMA 0207 E 96	6.19 K OHMS 1% MET FILM

Parts List for SWP YIG DRIV 12-18 ASSY No. 101BA28204 Rev. E

Item	Part Number	Qty	FSCM	Mfr's Part Number	Description
R 12	RN55-11000	1	05905	SMA 0207 E 96	1 K OHMS 1% MET FILM
R 13	RAPD-12000	1	73138	89PR2K	2K POT 15T PC MNT
R 14	RN55-21000	1	05905	SMA 0207 E 96	10 K OHMS 1% MET FILM
R 15	RN55-21000	1	05905	SMA 0207 E 96	10 K OHMS 1% MET FILM
R 16	RN55-25620	1	05905	SMA 0207 E 96	56.2 K OHMS 1% MET FILM
R 17	RN55-25620	1	05905	SMA 0207 E 96	56.2 K OHMS 1% MET FILM
R 18	RN55-02210	1	05905	SMA 0207 E 96	221 OHMS 1% MET FILM
R 19	RN55-15620	1	05905	SMA 0207 E 96	5.62 K OHMS 1% MET FILM
R 20	RN55-14990	1	05905	SMA 0207 E 96	4.99 K OHMS 1% MET FILM
R 21	RN55-11000	1	05905	SMA 0207 E 96	1 K OHMS 1% MET FILM
R 22	RN55-14990	1	05905	SMA 0207 E 96	4.99 K OHMS 1% MET FILM
R 23	RN55-31000	1	05905	SMA 0207 E 96	100 K OHMS 1% MET FILM
R 24	RN55-31240	1	05905	SMA 0207 E 96	124 K OHMS 1% MET FILM
R 25	RN55-21500	1	05905	SMA 0207 E 96	15 K OHMS 1% MET FILM
R 26	RN55-21000	1	05905	SMA 0207 E 96	10 K OHMS 1% MET FILM
R 27	RN55-01000	1	05905	SMA 0207 E 96	100 OHMS 1% MET FILM
R 28	RN55-21000	1	05905	SMA 0207 E 96	10 K OHMS 1% MET FILM
VR 1	DRAE-00827	1	04713	1N827	IN827 6.2V REF. DIODE

Parts List for YIG DRIVER 1.9-8.7 ASSY No. 101BA28211 Rev. E

Item		Part Number	Qty	FSCM	Mfr's Part Number	Description
	1	101BF28200	1	58900	101BF28200	YIG DRIVER BD
C	1	CC50-04100	1	56289	2CZ5U104X0050C4	.1 UF CERAMIC Z5U
C	2	CC50-04100	1	56289	2CZ5U104X0050C4	.1 UF CERAMIC Z5U
C	3	CC50-05100	1	56289	3CZ5U105X0050C5	1 UF CERAMIC Z5U
C	4	CC50-05100	1	56289	3CZ5U105X0050C5	1 UF CERAMIC Z5U
C	5	CC50-05100	1	56289	3CZ5U105X0050C5	1 UF CERAMIC Z5U
C	10	CC50-03100	1	51642	150-100-W5R-103K	.01 UF CERAMIC X7R
C	11	CC50-04100	1	56289	2CZ5U104X0050C4	.1 UF CERAMIC Z5U
C	12	CC50-03100	1	51642	150-100-W5R-103K	.01 UF CERAMIC X7R
C	13	CC50-03100	1	51642	150-100-W5R-103K	.01 UF CERAMIC X7R
C	14	CC50-05100	1	56289	3CZ5U105X0050C5	1 UF CERAMIC Z5U
C	15	CC50-05100	1	56289	3CZ5U105X0050C5	1 UF CERAMIC Z5U
C	16	CC50-03100	1	51642	150-100-W5R-103K	.01 UF CERAMIC X7R
C	17	CC50-03100	1	51642	150-100-W5R-103K	.01 UF CERAMIC X7R
C	18	CC50-03100	1	51642	150-100-W5R-103K	.01 UF CERAMIC X7R
C	19	CC50-02100	1	52763	EDPT-1000-Y5P10%	.001 UF CERAMIC Y5P
C	20	CC50-03220	1	51642	150-100-W5R-223K	.022 UF CERAMIC X7R
C	21	CC50-03100	1	51642	150-100-W5R-103K	.01 UF CERAMIC X7R
C	22	CC50-05100	1	56289	3CZ5U105X0050C5	1 UF CERAMIC Z5U
C	23	CC50-00470	1	52763	EDPT-47-NPO-5%	47 PF CERAMIC NPO
CR	1	DSA0-04148	1	07263	1N4148	IN4148 G.P. DIODE
CR	2	DSA0-04148	1	07263	1N4148	IN4148 G.P. DIODE
CR	3	DSA0-04148	1	07263	1N4148	IN4148 G.P. DIODE
IC	3	UIN0-07542	1	24355	AD7542KN	AD7542KN 12 BIT D/A
IC	4	UOG0-00027	1	24355	AD OP27GH	OP27GH LOW DRIFT OP AMP
IC	6	UOG0-00027	1	24355	AD OP27GH	OP27GH LOW DRIFT OP AMP
IC	7	UON0-00072	1	01295	TL072CP	TL072CP DUAL FET OP AMP
IC	8	URP0-79120	1	04713	MC79L12CP	MC79L12 .1A -12V REG
IC	9	URP0-78120	1	04713	MC78L12CP	MC78L12CP .1A 12V REG
Q	1	QBNS-02222	1	27014	PN2222	PN2222 .5A 30V NPN
Q	2	QJNS-04091	1	04713	2N4091	2N4091 30OHM N CH JFET
Q	3	QBNS-00012	1	04713	MPSA12	MPSA12 20K HFE NPN
Q	4	QBPS-03645	1	27014	PN3645	PN3645 .5A 60V .6W PNP
R	4	RN55-18250	1	05905	SMA 0207 E 96	8.25 K OHMS 1% MET FILM
R	6	RN55-31000	1	05905	SMA 0207 E 96	100 K OHMS 1% MET FILM
R	7	RN55-21690	1	05905	SMA 0207 E 96	16.9 K OHMS 1% MET FILM
R	8	RN55-21270	1	05905	SMA 0207 E 96	12.7 K OHMS 1% MET FILM
R	9	RN55-11820	1	05905	SMA 0207 E 96	1.82 K OHMS 1% MET FILM
R	10	RAPD-11000	1	73138	89PR1K	1K POT 15T PC MNT
R	11	RN55-08250	1	05905	SMA 0207 E 96	825 OHMS 1% MET FILM
R	12	RN55-11000	1	05905	SMA 0207 E 96	1 K OHMS 1% MET FILM
R	13	RAPD-12000	1	73138	89PR2K	2K POT 15T PC MNT
R	14	RN55-21000	1	05905	SMA 0207 E 96	10 K OHMS 1% MET FILM
R	15	RN55-21000	1	05905	SMA 0207 E 96	10 K OHMS 1% MET FILM
R	16	RN55-25620	1	05905	SMA 0207 E 96	56.2 K OHMS 1% MET FILM
R	17	RN55-25620	1	05905	SMA 0207 E 96	56.2 K OHMS 1% MET FILM
R	18	RN55-02210	1	05905	SMA 0207 E 96	221 OHMS 1% MET FILM
R	19	RN55-15620	1	05905	SMA 0207 E 96	5.62 K OHMS 1% MET FILM
R	20	RN55-14990	1	05905	SMA 0207 E 96	4.99 K OHMS 1% MET FILM
R	21	RN55-11000	1	05905	SMA 0207 E 96	1 K OHMS 1% MET FILM
R	22	RN55-14990	1	05905	SMA 0207 E 96	4.99 K OHMS 1% MET FILM

Parts List for YIG DRIVER 1.9-8.7 ASSY No. 101BA28211 Rev. E

Item	Part Number	Qty	FSCM	Mfr's Part Number	Description
R 23	RN55-31000	1	05905	SMA 0207 E 96	100 K OHMS 1% MET FILM
R 24	RN55-31240	1	05905	SMA 0207 E 96	124 K OHMS 1% MET FILM
R 25	RN55-21500	1	05905	SMA 0207 E 96	15 K OHMS 1% MET FILM
R 26	RN55-21000	1	05905	SMA 0207 E 96	10 K OHMS 1% MET FILM
R 27	RN55-01000	1	05905	SMA 0207 E 96	100 OHMS 1% MET FILM
R 28	RN55-21000	1	05905	SMA 0207 E 96	10 K OHMS 1% MET FILM
R 29	RN55-03920	1	05905	SMA 0207 E 96	392 OHMS 1% MET FILM
VR 1	DRAE-00827	1	04713	1N827	IN827 6.2V REF. DIODE
VR 2	DZAA-04620	1	04713	1N4620	1N4620 3.3 V ZENER

Parts List for SWP YIG DRIV 8-12 ASSY No. 101BA28203 Rev. E

Item		Part Number	Qty	FSCM	Mfr's Part Number	Description
	1	101BF28200	1	58900	101BF28200	YIG DRIVER BD
C	1	CC50-04100	1	56289	2CZ5U104X0050C4	.1 UF CERAMIC Z5U
C	2	CC50-04100	1	56289	2CZ5U104X0050C4	.1 UF CERAMIC Z5U
C	3	CC50-05100	1	56289	3CZ5U105X0050C5	1 UF CERAMIC Z5U
C	4	CC50-05100	1	56289	3CZ5U105X0050C5	1 UF CERAMIC Z5U
C	5	CC50-05100	1	56289	3CZ5U105X0050C5	1 UF CERAMIC Z5U
C	6	CC50-03100	1	51642	150-100-W5R-103K	.01 UF CERAMIC X7R
C	7	CC50-03100	1	51642	150-100-W5R-103K	.01 UF CERAMIC X7R
C	8	CC50-03100	1	51642	150-100-W5R-103K	.01 UF CERAMIC X7R
C	9	CC50-02100	1	52763	EDPT-1000-Y5P10%	.001 UF CERAMIC Y5P
C	10	CC50-03100	1	51642	150-100-W5R-103K	.01 UF CERAMIC X7R
C	11	CC50-04100	1	56289	2CZ5U104X0050C4	.1 UF CERAMIC Z5U
C	12	CC50-03100	1	51642	150-100-W5R-103K	.01 UF CERAMIC X7R
C	13	CC50-03100	1	51642	150-100-W5R-103K	.01 UF CERAMIC X7R
C	14	CC50-05100	1	56289	3CZ5U105X0050C5	1 UF CERAMIC Z5U
C	15	CC50-05100	1	56289	3CZ5U105X0050C5	1 UF CERAMIC Z5U
C	16	CC50-03100	1	51642	150-100-W5R-103K	.01 UF CERAMIC X7R
C	17	CC50-03100	1	51642	150-100-W5R-103K	.01 UF CERAMIC X7R
C	18	CC50-03100	1	51642	150-100-W5R-103K	.01 UF CERAMIC X7R
C	19	CC50-02100	1	52763	EDPT-1000-Y5P10%	.001 UF CERAMIC Y5P
C	20	CC50-03220	1	51642	150-100-W5R-223K	.022 UF CERAMIC X7R
C	21	CC50-03100	1	51642	150-100-W5R-103K	.01 UF CERAMIC X7R
C	22	CC50-05100	1	56289	3CZ5U105X0050C5	1 UF CERAMIC Z5U
C	23	CC50-00470	1	52763	EDPT-47-NPO-5%	47 PF CERAMIC NPO
CR	1	DSA0-04148	1	07263	1N4148	IN4148 G.P. DIODE
CR	2	DSA0-04148	1	07263	1N4148	IN4148 G.P. DIODE
CR	3	DSA0-04148	1	07263	1N4148	IN4148 G.P. DIODE
IC	1	UOG0-00027	1	24355	AD OP27GH	OP27GH LOW DRIFT OP AMP
IC	2	UIN0-07542	1	24355	AD7542KN	AD7542KN 12 BIT D/A
IC	3	UIN0-07542	1	24355	AD7542KN	AD7542KN 12 BIT D/A
IC	4	UOG0-00027	1	24355	AD OP27GH	OP27GH LOW DRIFT OP AMP
IC	5	UCN0-00110	1	04713	MC14011BCP	MC14011BCP QUAD NAND
IC	6	UOG0-00027	1	24355	AD OP27GH	OP27GH LOW DRIFT OP AMP
IC	7	UON0-00072	1	01295	TL072CP	TL072CP DUAL FET OP AMP
IC	8	URP0-79120	1	04713	MC79L12CP	MC79L12 .1A -12V REG
IC	9	URP0-78120	1	04713	MC78L12CP	MC78L12CP .1A 12V REG
Q	1	QBNS-02222	1	27014	PN2222	PN2222 .5A 30V NPN
Q	2	QJNS-04091	1	04713	2N4091	2N4091 30OHM N CH JFET
Q	3	QBNS-00012	1	04713	MPSA12	MPSA12 20K HFE NPN
Q	4	QBPS-03645	1	27014	PN3645	PN3645 .5A 60V .6W PNP
R	1	RN55-18250	1	05905	SMA 0207 E 96	8.25 K OHMS 1% MET FILM
R	2	RAPD-21000	1	73138	89PR10K	10K POT 15T PC MNT
R	3	RN55-31000	1	05905	SMA 0207 E 96	100 K OHMS 1% MET FILM
R	4	RN55-18250	1	05905	SMA 0207 E 96	8.25 K OHMS 1% MET FILM
R	5	RN55-28250	1	05905	SMA 0207 E 96	82.5 K OHMS 1% MET FILM
R	6	RN55-31000	1	05905	SMA 0207 E 96	100 K OHMS 1% MET FILM
R	7	RN55-21690	1	05905	SMA 0207 E 96	16.9 K OHMS 1% MET FILM
R	8	RN55-21270	1	05905	SMA 0207 E 96	12.7 K OHMS 1% MET FILM
R	9	RN55-11820	1	05905	SMA 0207 E 96	1.82 K OHMS 1% MET FILM
R	10	RAPD-11000	1	73138	89PR1K	1K POT 15T PC MNT
R	11	RN55-08250	1	05905	SMA 0207 E 96	825 OHMS 1% MET FILM

Parts List for SWP YIG DRIV 8-12 ASSY No. 101BA28203 Rev. E

Item	Part Number	Qty	FSCM	Mfr's Part Number	Description
R 12	RN55-11000	1	05905	SMA 0207 E 96	1 K OHMS 1% MET FILM
R 13	RAPD-12000	1	73138	89PR2K	2K POT 15T PC MNT
R 14	RN55-21000	1	05905	SMA 0207 E 96	10 K OHMS 1% MET FILM
R 15	RN55-21000	1	05905	SMA 0207 E 96	10 K OHMS 1% MET FILM
R 16	RN55-25620	1	05905	SMA 0207 E 96	56.2 K OHMS 1% MET FILM
R 17	RN55-25620	1	05905	SMA 0207 E 96	56.2 K OHMS 1% MET FILM
R 18	RN55-02210	1	05905	SMA 0207 E 96	221 OHMS 1% MET FILM
R 19	RN55-15620	1	05905	SMA 0207 E 96	5.62 K OHMS 1% MET FILM
R 20	RN55-14990	1	05905	SMA 0207 E 96	4.99 K OHMS 1% MET FILM
R 21	RN55-11000	1	05905	SMA 0207 E 96	1 K OHMS 1% MET FILM
R 22	RN55-14990	1	05905	SMA 0207 E 96	4.99 K OHMS 1% MET FILM
R 23	RN55-31000	1	05905	SMA 0207 E 96	100 K OHMS 1% MET FILM
R 24	RN55-31240	1	05905	SMA 0207 E 96	124 K OHMS 1% MET FILM
R 25	RN55-21500	1	05905	SMA 0207 E 96	15 K OHMS 1% MET FILM
R 26	RN55-21000	1	05905	SMA 0207 E 96	10 K OHMS 1% MET FILM
R 27	RN55-01000	1	05905	SMA 0207 E 96	100 OHMS 1% MET FILM
R 28	RN55-21000	1	05905	SMA 0207 E 96	10 K OHMS 1% MET FILM
R 77	RN55-24750	1	05905	SMA 0207 E 96	47.5 K OHMS 1% MET FILM
R 99	RN55-13160	1	05905	SMA 0207 E 96	3.16 K OHMS 1% MET FILM
VR 1	DRAE-00827	1	04713	1N827	IN827 6.2V REF. DIODE

Parts List for FIXED LO PLL PC ASSY No. 105BA09200 Rev. A

Item		Part Number	Qty	FSCM	Mfr's Part Number	Description
	1	105BF09200	1	58900	105BF09200	FIXED LO PLL BD
	2	HQH0-00010	1	05820	651-B	IC HEATSINK
	3	ETST-06224	2	88245	1280B	TURRET TERMINAL
C	1	CC50-05100	1	56289	3CZ5U105X0050C5	1 UF CERAMIC Z5U
C	2	CC50-02100	1	52763	EDPT-1000-Y5P10%	.001 UF CERAMIC Y5P
C	3	CC50-03100	1	51642	150-100-W5R-103K	.01 UF CERAMIC X7R
C	4	CC50-?????	1	51642	150-100-C0G-???J	SELECTED IN TEST
C	5	CC50-05100	1	56289	3CZ5U105X0050C5	1 UF CERAMIC Z5U
C	6	CC50-05100	1	56289	3CZ5U105X0050C5	1 UF CERAMIC Z5U
C	8	CC50-03100	1	51642	150-100-W5R-103K	.01 UF CERAMIC X7R
C	9	CC50-03100	1	51642	150-100-W5R-103K	.01 UF CERAMIC X7R
C	10	CC50-05100	1	56289	3CZ5U105X0050C5	1 UF CERAMIC Z5U
C	11	CT10-06390	1	56289	150D396X9010B2	39 UF 10V TANTALUM
C	12	CC50-02100	1	52763	EDPT-1000-Y5P10%	.001 UF CERAMIC Y5P
C	13	CC50-02100	1	52763	EDPT-1000-Y5P10%	.001 UF CERAMIC Y5P
C	14	CC50-02100	1	52763	EDPT-1000-Y5P10%	.001 UF CERAMIC Y5P
C	15	CC50-02100	1	52763	EDPT-1000-Y5P10%	.001 UF CERAMIC Y5P
C	19	CT10-06390	1	56289	150D396X9010B2	39 UF 10V TANTALUM
C	20	CC50-03100	1	51642	150-100-W5R-103K	.01 UF CERAMIC X7R
C	21	CC50-04100	1	56289	2CZ5U104X0050C4	.1 UF CERAMIC Z5U
CR	1	DSA0-04148	1	07263	1N4148	IN4148 G.P. DIODE
CR	2	DSA0-04148	1	07263	1N4148	IN4148 G.P. DIODE
CR	3	DSA0-04148	1	07263	1N4148	IN4148 G.P. DIODE
CR	4	DSA0-04148	1	07263	1N4148	IN4148 G.P. DIODE
CR	5	DSA0-04148	1	07263	1N4148	IN4148 G.P. DIODE
CR	6	DSA0-04148	1	07263	1N4148	IN4148 G.P. DIODE
CR	7	DSA0-04148	1	07263	1N4148	IN4148 G.P. DIODE
CR	8	DSA0-04148	1	07263	1N4148	IN4148 G.P. DIODE
CR	9	DSA0-04148	1	07263	1N4148	IN4148 G.P. DIODE
DS	1	ILRR-00125	1	58361	MV5077B	RED LED 1/8" DIA
IC	1	UON0-00070	1	01295	TL070CP	TL070 FET OP AMP
IC	2	UON0-00072	1	01295	TL072CP	TL072CP DUAL FET OP AMP
IC	3	UON0-00072	1	01295	TL072CP	TL072CP DUAL FET OP AMP
IC	4	UEN0-12040	1	04713	MC12040P	MC12040P PHASE/FREQ DET
IC	5	UEN0-10131	1	04713	MC10131P	MC10131P DUAL D F/F
Q	1	QBNS-02222	1	27014	PN2222	PN2222 .5A 30V NPN
Q	2	QBNS-02222	1	27014	PN2222	PN2222 .5A 30V NPN
R	2	RN55-11000	1	05905	SMA 0207 E 96	1 K OHMS 1% MET FILM
R	3	RN55-21870	1	05905	SMA 0207 E 96	18.7 K OHMS 1% MET FILM
R	4	RN55-21000	1	05905	SMA 0207 E 96	10 K OHMS 1% MET FILM
R	5	RN55-21000	1	05905	SMA 0207 E 96	10 K OHMS 1% MET FILM
R	6	RN55-12740	1	05905	SMA 0207 E 96	2.74 K OHMS 1% MET FILM
R	7	RN55-21210	1	05905	SMA 0207 E 96	12.1 K OHMS 1% MET FILM
R	8	RN55-22210	1	05905	SMA 0207 E 96	22.1 K OHMS 1% MET FILM
R	9	RN55-31500	1	05905	SMA 0207 E 96	150 K OHMS 1% MET FILM
R	10	RN55-11000	1	05905	SMA 0207 E 96	1 K OHMS 1% MET FILM
R	11	RN55-31240	1	05905	SMA 0207 E 96	124 K OHMS 1% MET FILM
R	13	RN55-13320	1	05905	SMA 0207 E 96	3.32 K OHMS 1% MET FILM
R	14	RN55-28250	1	05905	SMA 0207 E 96	82.5 K OHMS 1% MET FILM
R	15	RN55-28250	1	05905	SMA 0207 E 96	82.5 K OHMS 1% MET FILM
R	16	RN55-11500	1	05905	SMA 0207 E 96	1.5 K OHMS 1% MET FILM

Parts List for FIXED LO PLL PC ASSY No. 105BA09200 Rev. E

Item		Part Number	Qty	FSCM	Mfr's Part Number	Description
	1	105BF09200	1	58900	105BF09200	FIXED LO PLL BD
	2	HQH0-00010	1	05820	651-B	IC HEATSINK
	3	ETST-06224	2	88245	1280B	TURRET TERMINAL
C	1	CC50-05100	1	56289	3CZ5U105X0050C5	1 UF CERAMIC Z5U
C	2	CC50-02100	1	52763	EDPT-1000-Y5P10%	.001 UF CERAMIC Y5P
C	3	CC50-03100	1	51642	150-100-W5R-103K	.01 UF CERAMIC X7R
C	4	CC50-?????	1	51642	150-100-COG-???J	SELECTED IN TEST
C	5	CC50-05100	1	56289	3CZ5U105X0050C5	1 UF CERAMIC Z5U
C	6	CC50-05100	1	56289	3CZ5U105X0050C5	1 UF CERAMIC Z5U
C	8	CC50-03100	1	51642	150-100-W5R-103K	.01 UF CERAMIC X7R
C	9	CC50-03100	1	51642	150-100-W5R-103K	.01 UF CERAMIC X7R
C	10	CC50-05100	1	56289	3CZ5U105X0050C5	1 UF CERAMIC Z5U
C	11	CT10-06390	1	56289	150D396X9010B2	39 UF 10V TANTALUM
C	12	CC50-02100	1	52763	EDPT-1000-Y5P10%	.001 UF CERAMIC Y5P
C	13	CC50-02100	1	52763	EDPT-1000-Y5P10%	.001 UF CERAMIC Y5P
C	14	CC50-02100	1	52763	EDPT-1000-Y5P10%	.001 UF CERAMIC Y5P
C	15	CC50-02100	1	52763	EDPT-1000-Y5P10%	.001 UF CERAMIC Y5P
C	19	CT10-06390	1	56289	150D396X9010B2	39 UF 10V TANTALUM
C	20	CC50-03100	1	51642	150-100-W5R-103K	.01 UF CERAMIC X7R
C	21	CC50-04100	1	56289	2CZ5U104X0050C4	.1 UF CERAMIC Z5U
CR	1	DSA0-04148	1	07263	1N4148	IN4148 G.P. DIODE
CR	2	DSA0-04148	1	07263	1N4148	IN4148 G.P. DIODE
CR	3	DSA0-04148	1	07263	1N4148	IN4148 G.P. DIODE
CR	4	DSA0-04148	1	07263	1N4148	IN4148 G.P. DIODE
CR	5	DSA0-04148	1	07263	1N4148	1N4148 G.P. DIODE
CR	6	DSA0-04148	1	07263	1N4148	IN4148 G.P. DIODE
CR	7	DSA0-04148	1	07263	1N4148	1N4148 G.P. DIODE
CR	8	DSA0-04148	1	07263	1N4148	IN4148 G.P. DIODE
CR	9	DSA0-04148	1	07263	1N4148	IN4148 G.P. DIODE
DS	1	ILRR-00125	1	58361	MV5077B	RED LED 1/8" DIA
IC	1	UON0-00070	1	01295	TL070CP	TL070 FET OP AMP
IC	2	UON0-00072	1	01295	TL072CP	TL072CP DUAL FET OP AMP
IC	3	UON0-00072	1	01295	TL072CP	TL072CP DUAL FET OP AMP
IC	4	UEN0-12040	1	04713	MC12040P	MC12040P PHASE/FREQ DET
IC	5	UEN0-10131	1	04713	MC10131P	MC10131P DUAL D F/F
Q	1	QBNS-02222	1	27014	PN2222	PN2222 .5A 30V NPN
Q	2	QBNS-02222	1	27014	PN2222	PN2222 .5A 30V NPN
R	2	RN55-11000	1	05905	SMA 0207 E 96	1 K OHMS 1% MET FILM
R	3	RN55-21870	1	05905	SMA 0207 E 96	18.7 K OHMS 1% MET FILM
R	4	RN55-21000	1	05905	SMA 0207 E 96	10 K OHMS 1% MET FILM
R	5	RN55-21000	1	05905	SMA 0207 E 96	10 K OHMS 1% MET FILM
R	6	RN55-12740	1	05905	SMA 0207 E 96	2.74 K OHMS 1% MET FILM
R	7	RN55-21210	1	05905	SMA 0207 E 96	12.1 K OHMS 1% MET FILM
R	8	RN55-22210	1	05905	SMA 0207 E 96	22.1 K OHMS 1% MET FILM
R	9	RN55-31500	1	05905	SMA 0207 E 96	150 K OHMS 1% MET FILM
R	10	RN55-11000	1	05905	SMA 0207 E 96	1 K OHMS 1% MET FILM
R	11	RN55-31240	1	05905	SMA 0207 E 96	124 K OHMS 1% MET FILM
R	13	RN55-13320	1	05905	SMA 0207 E 96	3.32 K OHMS 1% MET FILM
R	14	RN55-28250	1	05905	SMA 0207 E 96	82.5 K OHMS 1% MET FILM
R	15	RN55-28250	1	05905	SMA 0207 E 96	82.5 K OHMS 1% MET FILM
R	16	RN55-11500	1	05905	SMA 0207 E 96	1.5 K OHMS 1% MET FILM

Parts List for FIXED LO PLL PC ASSY No. 10SBA09200 Rev. E

Item	Part Number	Qty	FSCM	Mfr's Part Number	Description
R 17	RN55-33010	1	05905	SMA 0207 E 96	301 K OHMS 1% MET FILM
R 18	RN55-21500	1	05905	SMA 0207 E 96	15 K OHMS 1% MET FILM
R 19	RN55-11000	1	05905	SMA 0207 E 96	1 K OHMS 1% MET FILM
R 20	RN55-11000	1	05905	SMA 0207 E 96	1 K OHMS 1% MET FILM
R 21	RN55-26340	1	05905	SMA 0207 E 96	63.4 K OHMS 1% MET FILM
R 22	RN55-31000	1	05905	SMA 0207 E 96	100 K OHMS 1% MET FILM
R 23	RN55-31000	1	05905	SMA 0207 E 96	100 K OHMS 1% MET FILM
R 24	RN55-31500	1	05905	SMA 0207 E 96	150 K OHMS 1% MET FILM
R 25	RN55-24750	1	05905	SMA 0207 E 96	47.5 K OHMS 1% MET FILM
R 26	RN55-31500	1	05905	SMA 0207 E 96	150 K OHMS 1% MET FILM
R 28	RN55-00825	1	05905	SMA 0207 E 96	82.5 OHMS 1% MET FILM
R 29	RN55-01300	1	05905	SMA 0207 E 96	130 OHMS 1% MET FILM
R 30	RN55-00825	1	05905	SMA 0207 E 96	82.5 OHMS 1% MET FILM
R 31	RN55-01300	1	05905	SMA 0207 E 96	130 OHMS 1% MET FILM
RM 1	RM7S-05600	1	71450	750-81-R560	560 OHM X 7 SIP NETWRK

Parts List for REFERENCE PLL PC ASSY No. 101BA07400 Rev. E

Item		Part Number	Qty	FSCM	Mfr's Part Number	Description
	1	101BF07400	1	58900	101BF07400	PLL BD
	2	HQH0-00010	1	05820	651-B	IC HEATSINK
	3	ETST-06224	2	88245	1280B	TURRET TERMINAL
C	1	CC50-05100	1	56289	3CZ5U105X0050C5	1 UF CERAMIC Z5U
C	2	CC50-02100	1	52763	EDPT-1000-Y5P10%	.001 UF CERAMIC Y5P
C	3	CC50-03100	1	51642	150-100-W5R-103K	.01 UF CERAMIC X7R
C	5	CC50-05100	1	56289	3CZ5U105X0050C5	1 UF CERAMIC Z5U
C	6	CC50-05100	1	56289	3CZ5U105X0050C5	1 UF CERAMIC Z5U
C	7	CC50-03470	1	51642	150-100-W5R-473	.047 UF CERAMIC X7R
C	8	CC50-03100	1	51642	150-100-W5R-103K	.01 UF CERAMIC X7R
C	9	CC50-03100	1	51642	150-100-W5R-103K	.01 UF CERAMIC X7R
C	10	CC50-05100	1	56289	3CZ5U105X0050C5	1 UF CERAMIC Z5U
C	11	CT10-06390	1	56289	150D396X9010B2	39 UF 10V TANTALUM
C	12	CC50-02100	1	52763	EDPT-1000-Y5P10%	.001 UF CERAMIC Y5P
C	13	CC50-02100	1	52763	EDPT-1000-Y5P10%	.001 UF CERAMIC Y5P
C	14	CC50-02100	1	52763	EDPT-1000-Y5P10%	.001 UF CERAMIC Y5P
C	15	CC50-02100	1	52763	EDPT-1000-Y5P10%	.001 UF CERAMIC Y5P
C	16	CC50-03100	1	51642	150-100-W5R-103K	.01 UF CERAMIC X7R
C	17	CC50-03100	1	51642	150-100-W5R-103K	.01 UF CERAMIC X7R
C	18	CC50-01100	1	51642	150-100-COG-101J	100 PF CERAMIC NPO
C	19	CT10-06390	1	56289	150D396X9010B2	39 UF 10V TANTALUM
C	20	CC50-03100	1	51642	150-100-W5R-103K	.01 UF CERAMIC X7R
C	21	CC50-02100	1	52763	EDPT-1000-Y5P10%	.001 UF CERAMIC Y5P
CR	1	DSA0-04148	1	07263	1N4148	IN4148 G.P. DIODE
CR	2	DSA0-04148	1	07263	1N4148	IN4148 G.P. DIODE
CR	3	DSA0-04148	1	07263	1N4148	IN4148 G.P. DIODE
CR	4	DSA0-00300	1	07263	FDH300	FDH300 LOW LEAK DIODE
CR	5	DSA0-00300	1	07263	FDH300	FDH300 LOW LEAK DIODE
CR	6	DSA0-04148	1	07263	1N4148	IN4148 G.P. DIODE
CR	7	DSA0-04148	1	07263	1N4148	IN4148 G.P. DIODE
CR	8	DSA0-04148	1	07263	1N4148	IN4148 G.P. DIODE
DS	1	ILRR-00125	1	58361	MV5077B	RED LED 1/8" DIA
IC	1	UON0-13080	1	27014	LM13080N	LM13080N 250MA OP AMP
IC	2	UON0-00072	1	01295	TL072CP	TL072CP DUAL FET OP AMP
IC	3	UON0-00072	1	01295	TL072CP	TL072CP DUAL FET OP AMP
IC	4	UEN0-12040	1	04713	MC12040P	MC12040P PHASE/FREQ DET
IC	5	UEN0-10131	1	04713	MC10131P	MC10131P DUAL D F/F
IC	6	UEN0-10102	1	04713	MC10102P	MC10102P QUAD NOR
IC	7	UEN0-10131	1	04713	MC10131P	MC10131P DUAL D F/F
Q	1	QBNS-02222	1	27014	PN2222	PN2222 .5A 30V NPN
Q	2	QBNS-02222	1	27014	PN2222	PN2222 .5A 30V NPN
Q	3	QBPS-02907	1	27014	PN2907	PN2907 .5A 40V .6W PNP
R	1	RN55-41000	1	05905	SMA 0207 E 96	1 M OHMS 1% MET FILM
R	2	RN55-11000	1	05905	SMA 0207 E 96	1 K OHMS 1% MET FILM
R	3	RN55-21870	1	05905	SMA 0207 E 96	18.7 K OHMS 1% MET FILM
R	4	RN55-21000	1	05905	SMA 0207 E 96	10 K OHMS 1% MET FILM
R	5	RN55-21000	1	05905	SMA 0207 E 96	10 K OHMS 1% MET FILM
R	6	RN55-12740	1	05905	SMA 0207 E 96	2.74 K OHMS 1% MET FILM
R	7	RN55-21210	1	05905	SMA 0207 E 96	12.1 K OHMS 1% MET FILM
R	8	RN55-22210	1	05905	SMA 0207 E 96	22.1 K OHMS 1% MET FILM
R	9	RN55-31500	1	05905	SMA 0207 E 96	150 K OHMS 1% MET FILM

Parts List for REFERENCE PLL PC ASSY No. 101BA07400 Rev. E

Item	Part Number	Qty	FSCM	Mfr's Part Number	Description
R 10	RN55-11000	1	05905	SMA 0207 E 96	1 K OHMS 1% MET FILM
R 11	RN55-31240	1	05905	SMA 0207 E 96	124 K OHMS 1% MET FILM
R 12	RN55-00100	1	05905	SMA 0207 E 96	10 OHMS 1% MET FILM
R 13	RN55-13320	1	05905	SMA 0207 E 96	3.32 K OHMS 1% MET FILM
R 14	RN55-28250	1	05905	SMA 0207 E 96	82.5 K OHMS 1% MET FILM
R 15	RN55-28250	1	05905	SMA 0207 E 96	82.5 K OHMS 1% MET FILM
R 16	RN55-11500	1	05905	SMA 0207 E 96	1.5 K OHMS 1% MET FILM
R 17	RN55-33010	1	05905	SMA 0207 E 96	301 K OHMS 1% MET FILM
R 18	RN55-21500	1	05905	SMA 0207 E 96	15 K OHMS 1% MET FILM
R 19	RN55-11000	1	05905	SMA 0207 E 96	1 K OHMS 1% MET FILM
R 20	RN55-11000	1	05905	SMA 0207 E 96	1 K OHMS 1% MET FILM
R 21	RN55-26340	1	05905	SMA 0207 E 96	63.4 K OHMS 1% MET FILM
R 22	RN55-31000	1	05905	SMA 0207 E 96	100 K OHMS 1% MET FILM
R 23	RN55-31000	1	05905	SMA 0207 E 96	100 K OHMS 1% MET FILM
R 24	RN55-31500	1	05905	SMA 0207 E 96	150 K OHMS 1% MET FILM
R 25	RN55-24750	1	05905	SMA 0207 E 96	47.5 K OHMS 1% MET FILM
R 26	RN55-31500	1	05905	SMA 0207 E 96	150 K OHMS 1% MET FILM
R 27	RN55-01300	1	05905	SMA 0207 E 96	130 OHMS 1% MET FILM
R 28	RN55-00825	1	05905	SMA 0207 E 96	82.5 OHMS 1% MET FILM
R 29	RN55-01300	1	05905	SMA 0207 E 96	130 OHMS 1% MET FILM
R 30	RN55-00825	1	05905	SMA 0207 E 96	82.5 OHMS 1% MET FILM
R 31	RN55-05620	1	05905	SMA 0207 E 96	562 OHMS 1% MET FILM
R 32	RN55-01000	1	05905	SMA 0207 E 96	100 OHMS 1% MET FILM
R 33	RN55-05620	1	05905	SMA 0207 E 96	562 OHMS 1% MET FILM
R 34	RN55-00562	1	05905	SMA 0207 E 96	56.2 OHMS 1% MET FILM
R 35	RN55-21000	1	05905	SMA 0207 E 96	10 K OHMS 1% MET FILM
RM 1	RM7S-05600	1	71450	750-81-R560	560 OHM X 7 SIP NETWRK
RM 2	RM7S-05600	1	71450	750-81-R560	560 OHM X 7 SIP NETWRK

Parts List for 1018 PULSE MOD PC ASSY No. 101CA06602 Rev. G

Item	Part Number	Qty	FSCM	Mfr's Part Number	Description
1	101CF06600	1	58900	101CF06600	PULSE MODULATION BD
C 1	CC50-03100	1	51642	150-100-W5R-103K	.01 UF CERAMIC X7R
C 2	CC50-02100	1	52763	EDPT-1000-Y5P10%	.001 UF CERAMIC Y5P
C 3	CT20-06100	1	56289	150D106X9020B2	10 UF 20V TANTALUM
C 4	CC50-04100	1	56289	2CZ5U104X0050C4	.1 UF CERAMIC Z5U
C 5	CC50-03100	1	51642	150-100-W5R-103K	.01 UF CERAMIC X7R
C 6	CC50-01100	1	51642	150-100-COG-101J	100 PF CERAMIC NPO
C 7	CC50-03100	1	51642	150-100-W5R-103K	.01 UF CERAMIC X7R
C 8	CC50-03100	1	51642	150-100-W5R-103K	.01 UF CERAMIC X7R
C 9	CC50-03680	1	51642	150-100-W5R-683	.068 UF CERAMIC X7R
C 10	CC50-02470	1	51642	200-100-W5R-472K	.0047 UF CERAMIC X7R
C 11	CC50-?????	1	00000	XXXXX	SELECTED IN TEST
C 12	CC50-02470	1	51642	200-100-W5R-472K	.0047 UF CERAMIC X7R
C 13	CC50-02100	1	52763	EDPT-1000-Y5P10%	.001 UF CERAMIC Y5P
C 14	CC50-01220	1	51642	150-100-COG-221	220 PF CERAMIC NPO
C 15	CC50-01510	1	51642	200-100-NPO-511J	510 PF CERAMIC
C 16	CC50-05100	1	56289	3CZ5U105X0050C5	1 UF CERAMIC Z5U
CR 8	DSA0-04148	1	07263	1N4148	IN4148 G.P. DIODE
CR 9	DSA0-04148	1	07263	1N4148	IN4148 G.P. DIODE
IC 1	UCN0-00010	1	04713	MC14001BCP	MC14001 QUAD NOR
IC 2	UIN0-01413	1	04713	MC1413P	MC1413P X7 DRIVER .5A
IC 3	UIN0-01413	1	04713	MC1413P	MC1413P X7 DRIVER .5A
IC 4	UTN0-03901	1	01295	SN74LS390N	SN74LS390N DUAL COUNTER
IC 5	UTN0-03901	1	01295	SN74LS390N	SN74LS390N DUAL COUNTER
IC 6	UTN0-00741	1	01295	SN74LS74N	SN74LS74 DUAL D F/F
IC 7	UTN0-01261	1	01295	SN74LS126N	SN74LS126N QUAD BUFFER
IC 8	UTN0-00861	1	01295	SN74LS86N	SN74LS86N QUAD EX OR
IC 9	UTN0-01261	1	01295	SN74LS126N	SN74LS126N QUAD BUFFER
IC 10	ULN0-00555	1	04713	MC1455P	MC1455P 200MA TIMER
Q 3	QBNS-03563	1	27014	PN3563	PN3563 15V 600MHZ NPN
Q 10	QBNS-04275	1	27014	PN4275	PN4275 .1A 15V .6W NPN
Q 11	QBPS-04258	1	27014	PN4258	PN4258 12V 700MHZ PNP
R 4	RN55-15620	1	05905	SMA 0207 E 96	5.62 K OHMS 1% MET FILM
R 5	RN55-15620	1	05905	SMA 0207 E 96	5.62 K OHMS 1% MET FILM
R 6	RN55-15620	1	05905	SMA 0207 E 96	5.62 K OHMS 1% MET FILM
R 7	RN55-15620	1	05905	SMA 0207 E 96	5.62 K OHMS 1% MET FILM
R 8	RN55-11000	1	05905	SMA 0207 E 96	1 K OHMS 1% MET FILM
R 9	RN55-01300	1	05905	SMA 0207 E 96	130 OHMS 1% MET FILM
R 10	RN55-00825	1	05905	SMA 0207 E 96	82.5 OHMS 1% MET FILM
R 11	RN55-21000	1	05905	SMA 0207 E 96	10 K OHMS 1% MET FILM
R 14	RN55-11300	1	05905	SMA 0207 E 96	1.3 K OHMS 1% MET FILM
R 15	RN55-04750	1	05905	SMA 0207 E 96	475 OHMS 1% MET FILM
R 16	RN55-21000	1	05905	SMA 0207 E 96	10 K OHMS 1% MET FILM
R 17	RN55-13320	1	05905	SMA 0207 E 96	3.32 K OHMS 1% MET FILM
R 18	RN55-04750	1	05905	SMA 0207 E 96	475 OHMS 1% MET FILM
R 19	RN55-00475	1	05905	SMA 0207 E 96	47.5 OHMS 1% MET FILM
R 20	RN55-11500	1	05905	SMA 0207 E 96	1.5 K OHMS 1% MET FILM
R 21	RN55-11000	1	05905	SMA 0207 E 96	1 K OHMS 1% MET FILM
R 22	RN55-14750	1	05905	SMA 0207 E 96	4.75 K OHMS 1% MET FILM
R 23	RN55-02210	1	05905	SMA 0207 E 96	221 OHMS 1% MET FILM
R 24	RN55-14750	1	05905	SMA 0207 E 96	4.75 K OHMS 1% MET FILM

Parts List for 1018 PULSE MOD PC ASSY No. 101CA06602 Rev. G

Item	Part Number	Qty	FSCM	Mfr's Part Number	Description
R 25	RC20-00680	1	01121	EB-680-5	68 OHMS 5% 1/2W CARBON
R 26	RC20-00680	1	01121	EB-680-5	68 OHMS 5% 1/2W CARBON
TP 1	ETST-06224	1	88245	1280B	TURRET TERMINAL

Parts List for 1026 PULSE MOD PC ASSY No. 101CA06601 Rev. G

Item	Part Number	Qty	FSCM	Mfr's Part Number	Description
1	101CF06600	1	58900	101CF06600	PULSE MODULATION BD
C 1	CC50-03100	1	51642	150-100-W5R-103K	.01 UF CERAMIC X7R
C 2	CC50-02100	1	52763	EDPT-1000-Y5P10%	.001 UF CERAMIC Y5P
C 3	CT20-06100	1	56289	150D106X9020B2	10 UF 20V TANTALUM
C 4	CC50-04100	1	56289	2CZ5U104X0050C4	.1 UF CERAMIC Z5U
C 5	CC50-03100	1	51642	150-100-W5R-103K	.01 UF CERAMIC X7R
C 6	CC50-01100	1	51642	150-100-C0G-101J	100 PF CERAMIC NPO
C 7	CC50-03100	1	51642	150-100-W5R-103K	.01 UF CERAMIC X7R
C 8	CC50-03100	1	51642	150-100-W5R-103K	.01 UF CERAMIC X7R
C 9	CC50-03680	1	51642	150-100-W5R-683	.068 UF CERAMIC X7R
C 10	CC50-?????	1	51642	150-100-C0G-???J	SELECTED IN TEST
C 11	CC50-?????	1	51642	150-100-C0G-???J	SELECTED IN TEST
C 12	CC50-02470	1	51642	200-100-W5R-472K	.0047 UF CERAMIC X7R
C 13	CC50-02100	1	52763	EDPT-1000-Y5P10%	.001 UF CERAMIC Y5P
C 14	CC50-?????	1	51642	150-100-C0G-???J	SELECTED IN TEST
C 15	CC50-?????	1	51642	150-100-C0G-???J	SELECTED IN TEST
C 16	CC50-05100	1	56289	3CZ5U105X0050C5	1 UF CERAMIC Z5U
CR 1	DPAB-05391	1	04713	1N5391	IN5391 1.5A 35V DIODE
CR 2	DSA0-04148	1	07263	1N4148	IN4148 G.P. DIODE
CR 3	DSA0-04148	1	07263	1N4148	IN4148 G.P. DIODE
CR 4	DSA0-04148	1	07263	1N4148	IN4148 G.P. DIODE
CR 5	DSA0-04148	1	07263	1N4148	IN4148 G.P. DIODE
CR 6	DSA0-04148	1	07263	1N4148	IN4148 G.P. DIODE
CR 7	DPAB-05391	1	04713	1N5391	IN5391 1.5A 35V DIODE
CR 8	DSA0-04148	1	07263	1N4148	IN4148 G.P. DIODE
CR 9	DSA0-04148	1	07263	1N4148	IN4148 G.P. DIODE
IC 4	UTN0-03901	1	01295	SN74LS390N	SN74LS390N DUAL COUNTER
IC 5	UTN0-03901	1	01295	SN74LS390N	SN74LS390N DUAL COUNTER
IC 6	UTN0-00741	1	01295	SN74LS74N	SN74LS74 DUAL D F/F
IC 7	UTN0-01261	1	01295	SN74LS126N	SN74LS126N QUAD BUFFER
IC 8	UTN0-00861	1	01295	SN74LS86N	SN74LS86N QUAD EX OR
IC 9	UTN0-01261	1	01295	SN74LS126N	SN74LS126N QUAD BUFFER
IC 10	ULN0-00555	1	04713	MC1455P	MC1455P 200MA TIMER
Q 1	QBNS-02222	1	27014	PN2222	PN2222 .5A 30V NPN
Q 2	QBNS-02222	1	27014	PN2222	PN2222 .5A 30V NPN
Q 3	QBNS-03563	1	27014	PN3563	PN3563 15V 600MHZ NPN
Q 4	QBPP-05193	1	04713	2N5193	2N5193 4A 40V 40W PNP
Q 5	QBNP-05190	1	04713	2N5190	2N5190 4A 40V 40W NPN
Q 6	QBNP-05190	1	04713	2N5190	2N5190 4A 40V 40W NPN
Q 7	QBPP-05193	1	04713	2N5193	2N5193 4A 40V 40W PNP
Q 8	QBNS-02222	1	27014	PN2222	PN2222 .5A 30V NPN
Q 9	QBNS-02222	1	27014	PN2222	PN2222 .5A 30V NPN
Q 10	QBNS-04275	1	27014	PN4275	PN4275 .1A 15V .6W NPN
Q 11	QBPS-04258	1	27014	PN4258	PN4258 12V 700MHZ PNP
R 1	RN55-21000	1	05905	SMA 0207 E 96	10 K OHMS 1% MET FILM
R 2	RN55-21000	1	05905	SMA 0207 E 96	10 K OHMS 1% MET FILM
R 3	RN55-15620	1	05905	SMA 0207 E 96	5.62 K OHMS 1% MET FILM
R 8	RN55-11000	1	05905	SMA 0207 E 96	1 K OHMS 1% MET FILM
R 9	RN55-01300	1	05905	SMA 0207 E 96	130 OHMS 1% MET FILM
R 10	RN55-00825	1	05905	SMA 0207 E 96	82.5 OHMS 1% MET FILM
R 11	RN55-21000	1	05905	SMA 0207 E 96	10 K OHMS 1% MET FILM

Parts List for 1026 PULSE MOD PC ASSY No. 101CA06601 Rev. G

Item	Part Number	Qty	FSCM	Mfr's Part Number	Description
R 12	RN55-21000	1	05905	SMA 0207 E 96	10 K OHMS 1% MET FILM
R 13	RN55-21000	1	05905	SMA 0207 E 96	10 K OHMS 1% MET FILM
R 14	RN55-11300	1	05905	SMA 0207 E 96	1.3 K OHMS 1% MET FILM
R 15	RN55-04750	1	05905	SMA 0207 E 96	475 OHMS 1% MET FILM
R 16	RN55-21000	1	05905	SMA 0207 E 96	10 K OHMS 1% MET FILM
R 17	RN55-13320	1	05905	SMA 0207 E 96	3.32 K OHMS 1% MET FILM
R 18	RN55-04750	1	05905	SMA 0207 E 96	475 OHMS 1% MET FILM
R 19	RN55-00475	1	05905	SMA 0207 E 96	47.5 OHMS 1% MET FILM
R 20	RN55-11500	1	05905	SMA 0207 E 96	1.5 K OHMS 1% MET FILM
R 21	RN55-11000	1	05905	SMA 0207 E 96	1 K OHMS 1% MET FILM
R 22	RN55-14750	1	05905	SMA 0207 E 96	4.75 K OHMS 1% MET FILM
R 23	RN55-02210	1	05905	SMA 0207 E 96	221 OHMS 1% MET FILM
R 24	RN55-14750	1	05905	SMA 0207 E 96	4.75 K OHMS 1% MET FILM
R 25	RC20-00680	1	01121	EB-680-5	68 OHMS 5% 1/2W CARBON
R 26	RC20-00680	1	01121	EB-680-5	68 OHMS 5% 1/2W CARBON
TP 1	ETST-06224	1	88245	1280B	TURRET TERMINAL

Parts List for LEVELLING SAMPLER ASSY No. 101CA25500 Rev. E

Item		Part Number	Qty	FSCM	Mfr's Part Number	Description
	1	101BF24100	1	58900	101BF24100	LEVELLING SAMP REAR SHLD
	2	101CF25500	1	58900	101CF25500	LEVELLING SAMPLER PCB
	3	101BF24000	1	58900	101BF24000	LEVELLING SAMP FRONT SHLD
	4	HSTS-40204	1	06540	9531B-A-0440	4-40 X 1/8 SWAGE SPACER
	5	HSTS-40604	1	55566	3049-B-440-A-0	4-40 X 3/8 SWAGE SPACER
	6	ETST-06224	1	88245	1280B	TURRET TERMINAL
C	1	CC50-03100	1	51642	150-100-W5R-103K	.01 UF CERAMIC X7R
C	2	CC50-03470	1	51642	150-100-W5R-473	.047 UF CERAMIC X7R
C	3	CT20-06100	1	56289	150D106X9020B2	10 UF 20V TANTALUM
C	5	CC50-03100	1	51642	150-100-W5R-103K	.01 UF CERAMIC X7R
C	6	CT20-06100	1	56289	150D106X9020B2	10 UF 20V TANTALUM
C	7	CC50-03680	1	51642	150-100-W5R-683	.068 UF CERAMIC X7R
C	8	CC50-03680	1	51642	150-100-W5R-683	.068 UF CERAMIC X7R
C	9	CC50-03470	1	51642	150-100-W5R-473	.047 UF CERAMIC X7R
C	10	CC50-02470	1	51642	200-100-W5R-472K	.0047 UF CERAMIC X7R
C	11	CC50-01100	1	51642	150-100-COG-101J	100 PF CERAMIC NPO
C	12	CC50-01100	1	51642	150-100-COG-101J	100 PF CERAMIC NPO
C	13	CT20-06100	1	56289	150D106X9020B2	10 UF 20V TANTALUM
C	14	CF00-02470	1	56289	192P47292	.0047 UF POLY FILM
C	15	CF00-02470	1	56289	192P47292	.0047 UF POLY FILM
C	16	CC50-03680	1	51642	150-100-W5R-683	.068 UF CERAMIC X7R
C	17	CC50-03680	1	51642	150-100-W5R-683	.068 UF CERAMIC X7R
C	18	CT20-06100	1	56289	150D106X9020B2	10 UF 20V TANTALUM
C	19	CC50-03470	1	51642	150-100-W5R-473	.047 UF CERAMIC X7R
C	20	CC50-03470	1	51642	150-100-W5R-473	.047 UF CERAMIC X7R
C	21	CC50-00470	1	52763	EDPT-47-NPO-5%	47 PF CERAMIC NPO
C	22	CC50-02100	1	52763	EDPT-1000-Y5P10%	.001 UF CERAMIC Y5P
C	23	CC50-00470	1	52763	EDPT-47-NPO-5%	47 PF CERAMIC NPO
C	24	CC50-02100	1	52763	EDPT-1000-Y5P10%	.001 UF CERAMIC Y5P
C	25	CC50-00560	1	51642	150-100-COG-560J	56 PF CERAMIC NPO
C	26	CC50-00100	1	51642	100-100-COG-100J	10 PF CERAMIC NPO
C	27	CT20-06100	1	56289	150D106X9020B2	10 UF 20V TANTALUM
CR	1	DSA0-04148	1	07263	1N4148	IN4148 G.P. DIODE
CR	2	DSA0-04148	1	07263	1N4148	IN4148 G.P. DIODE
CR	3	DSA0-04148	1	07263	1N4148	IN4148 G.P. DIODE
CR	4	DSA0-04148	1	07263	1N4148	IN4148 G.P. DIODE
CR	5	DSA0-04148	1	07263	1N4148	IN4148 G.P. DIODE
CR	6	DSA0-04148	1	07263	1N4148	IN4148 G.P. DIODE
IC	1	ULN0-02901	1	27014	LM2901N	LM2901N QUAD COMPARATOR
IC	2	UEN0-10124	1	04713	MC10124P	MC10124P QUAD TTL TO ECL
IC	3	UANP-00733	1	07263	UA733DC	UA733DC VIDEO AMP
IC	4	UON0-00072	1	01295	TL072CP	TL072CP DUAL FET OP AMP
IC	5	UOG0-03510	1	13919	3510AM	3510AM LOW DRIFT OP AMP
IC	6	UEN0-10102	1	04713	MC10102P	MC10102P QUAD NOR
IC	7	UON0-00074	1	01295	TL074CN	TL074CN QUAD FET OP AMP
IC	8	UEN0-10125	1	04713	MC10125P	MC10125P QUAD ECL TO TTL
IC	10	UTN0-00081	1	01295	SN74LS08N	SN74LS08 QUAD AND
IC	11	UTN0-01231	1	01295	SN74LS123N	SN74LS123N DUAL ONE SHOT
J	1	JRBM-00101	1	98291	51-053-0000	SMB M RTANG PC MOUNT
J	2	JRBM-00101	1	98291	51-053-0000	SMB M RTANG PC MOUNT
Q	1	QJNS-04091	1	04713	2N4091	2N4091 30OHM N CH JFET

Parts List for LEVELLING SAMPLER ASSY No. 101CA25500 Rev. E

Item	Part Number	Qty	FSCM	Mfr's Part Number	Description
Q 2	QJNS-04091	1	04713	2N4091	2N4091 30OHM N CH JFET
Q 3	QJNS-04091	1	04713	2N4091	2N4091 30OHM N CH JFET
Q 4	QJNS-04091	1	04713	2N4091	2N4091 30OHM N CH JFET
Q 5	QJNS-04091	1	04713	2N4091	2N4091 30OHM N CH JFET
Q 6	QJNS-04091	1	04713	2N4091	2N4091 30OHM N CH JFET
Q 7	QBNS-02222	1	27014	PN2222	PN2222 .5A 30V NPN
Q 9	QBNS-04275	1	27014	PN4275	PN4275 .1A 15V .6W NPN
Q 10	QBPS-05771	1	27014	2N5771	2N5771 15V 850MHZ PNP
Q 11	QBNS-04275	1	27014	PN4275	PN4275 .1A 15V .6W NPN
Q 12	QBPS-05771	1	27014	2N5771	2N5771 15V 850MHZ PNP
R 1	RN55-12210	1	05905	SMA 0207 E 96	2.21 K OHMS 1% MET FILM
R 2	RN55-02210	1	05905	SMA 0207 E 96	221 OHMS 1% MET FILM
R 3	RN55-21000	1	05905	SMA 0207 E 96	10 K OHMS 1% MET FILM
R 4	RN55-22210	1	05905	SMA 0207 E 96	22.1 K OHMS 1% MET FILM
R 5	RN55-21000	1	05905	SMA 0207 E 96	10 K OHMS 1% MET FILM
R 6	RN55-21000	1	05905	SMA 0207 E 96	10 K OHMS 1% MET FILM
R 7	RN55-21000	1	05905	SMA 0207 E 96	10 K OHMS 1% MET FILM
R 8	RN55-21000	1	05905	SMA 0207 E 96	10 K OHMS 1% MET FILM
R 9	RN55-21000	1	05905	SMA 0207 E 96	10 K OHMS 1% MET FILM
R 10	RN55-21000	1	05905	SMA 0207 E 96	10 K OHMS 1% MET FILM
R 11	RAPD-15000	1	73138	89PR5K	5K POT 15T PC MNT
R 12	RAPD-15000	1	73138	89PR5K	5K POT 15T PC MNT
R 13	RN55-41000	1	05905	SMA 0207 E 96	1 M OHMS 1% MET FILM
R 14	RN55-41000	1	05905	SMA 0207 E 96	1 M OHMS 1% MET FILM
R 15	RN55-41000	1	05905	SMA 0207 E 96	1 M OHMS 1% MET FILM
R 16	RN55-41000	1	05905	SMA 0207 E 96	1 M OHMS 1% MET FILM
R 17	RN55-14750	1	05905	SMA 0207 E 96	4.75 K OHMS 1% MET FILM
R 18	RN55-02210	1	05905	SMA 0207 E 96	221 OHMS 1% MET FILM
R 19	RN55-14750	1	05905	SMA 0207 E 96	4.75 K OHMS 1% MET FILM
R 20	RN55-21000	1	05905	SMA 0207 E 96	10 K OHMS 1% MET FILM
R 21	RN55-11000	1	05905	SMA 0207 E 96	1 K OHMS 1% MET FILM
R 22	RN55-21910	1	05905	SMA 0207 E 96	19.1 K OHMS 1% MET FILM
R 23	RN55-21000	1	05905	SMA 0207 E 96	10 K OHMS 1% MET FILM
R 24	RN55-21050	1	05905	SMA 0207 E 96	10.5 K OHMS 1% MET FILM
R 25	RN55-12210	1	05905	SMA 0207 E 96	2.21 K OHMS 1% MET FILM
R 26	RN55-05620	1	05905	SMA 0207 E 96	562 OHMS 1% MET FILM
R 27	RN55-15620	1	05905	SMA 0207 E 96	5.62 K OHMS 1% MET FILM
R 28	RN55-11000	1	05905	SMA 0207 E 96	1 K OHMS 1% MET FILM
R 29	RN55-32000	1	05905	SMA 0207 E 96	200 K OHMS 1% MET FILM
R 30	RN55-32740	1	05905	SMA 0207 E 96	274 K OHMS 1% MET FILM
R 31	RN55-11000	1	05905	SMA 0207 E 96	1 K OHMS 1% MET FILM
R 32	RN55-12210	1	05905	SMA 0207 E 96	2.21 K OHMS 1% MET FILM
R 33	RN55-05620	1	05905	SMA 0207 E 96	562 OHMS 1% MET FILM
R 34	RN55-05620	1	05905	SMA 0207 E 96	562 OHMS 1% MET FILM
R 35	RN55-05620	1	05905	SMA 0207 E 96	562 OHMS 1% MET FILM
R 36	RN55-11000	1	05905	SMA 0207 E 96	1 K OHMS 1% MET FILM
R 37	RN55-31000	1	05905	SMA 0207 E 96	100 K OHMS 1% MET FILM
R 38	RN55-03320	1	05905	SMA 0207 E 96	332 OHMS 1% MET FILM
R 39	RN55-31000	1	05905	SMA 0207 E 96	100 K OHMS 1% MET FILM
R 40	RN55-03320	1	05905	SMA 0207 E 96	332 OHMS 1% MET FILM
R 41	RN55-21000	1	05905	SMA 0207 E 96	10 K OHMS 1% MET FILM

Parts List for LEVELLING SAMPLER ASSY No. 101CA25500 Rev. E

Item	Part Number	Qty	FSCM	Mfr's Part Number	Description
R 42	RN55-22670	1	05905	SMA 0207 E 96	26.7 K OHMS 1% MET FILM
R 43	RN55-22210	1	05905	SMA 0207 E 96	22.1 K OHMS 1% MET FILM
R 44	RN55-21000	1	05905	SMA 0207 E 96	10 K OHMS 1% MET FILM
R 45	RN55-22210	1	05905	SMA 0207 E 96	22.1 K OHMS 1% MET FILM
R 46	RN55-04750	1	05905	SMA 0207 E 96	475 OHMS 1% MET FILM
R 49	RN55-14750	1	05905	SMA 0207 E 96	4.75 K OHMS 1% MET FILM
R 53	RN55-21000	1	05905	SMA 0207 E 96	10 K OHMS 1% MET FILM
R 54	RN55-21000	1	05905	SMA 0207 E 96	10 K OHMS 1% MET FILM
R 55	RN55-21000	1	05905	SMA 0207 E 96	10 K OHMS 1% MET FILM
R 56	RN55-21000	1	05905	SMA 0207 E 96	10 K OHMS 1% MET FILM
R 57	RN55-?????	1	00000	XXXXX	SELECTED IN TEST
R 58	RN55-14750	1	05905	SMA 0207 E 96	4.75 K OHMS 1% MET FILM
R 59	RN55-05620	1	05905	SMA 0207 E 96	562 OHMS 1% MET FILM

Parts List for LEVELLING LOG AMP ASSY No. 101CA25600 Rev. F

Item		Part Number	Qty	FSCM	Mfr's Part Number	Description
	1	101CF25600	1	58900	101CF25600	LEVELLING LOG AMP BD
	2	ETST-06224	1	88245	1280B	TURRET TERMINAL
C	1	CT20-06100	1	56289	150D106X9020B2	10 UF 20V TANTALUM
C	2	CC50-02100	1	52763	EDPT-1000-Y5P10%	.001 UF CERAMIC Y5P
C	3	CC50-02100	1	52763	EDPT-1000-Y5P10%	.001 UF CERAMIC Y5P
C	4	CC50-05100	1	56289	3CZ5U105X0050C5	1 UF CERAMIC Z5U
C	6	CC50-05100	1	56289	3CZ5U105X0050C5	1 UF CERAMIC Z5U
C	7	CC50-03100	1	51642	150-100-W5R-103K	.01 UF CERAMIC X7R
C	8	CC50-03100	1	51642	150-100-W5R-103K	.01 UF CERAMIC X7R
C	9	CC50-05100	1	56289	3CZ5U105X0050C5	1 UF CERAMIC Z5U
C	10	CT20-06022	1	56289	150D225X9020A2	2.2 UF 20V TANTALUM
C	11	CT20-06100	1	56289	150D106X9020B2	10 UF 20V TANTALUM
C	12	CC50-03100	1	51642	150-100-W5R-103K	.01 UF CERAMIC X7R
C	14	CC50-03100	1	51642	150-100-W5R-103K	.01 UF CERAMIC X7R
C	15	CC50-02100	1	52763	EDPT-1000-Y5P10%	.001 UF CERAMIC Y5P
C	16	CC50-02100	1	52763	EDPT-1000-Y5P10%	.001 UF CERAMIC Y5P
CR	1	DSA0-04148	1	07263	1N4148	IN4148 G.P. DIODE
CR	2	DSA0-04148	1	07263	1N4148	IN4148 G.P. DIODE
CR	3	DSA0-00300	1	07263	FDH300	FDH300 LOW LEAK DIODE
IC	1	UON0-00074	1	01295	TL074CN	TL074CN QUAD FET OP AMP
IC	2	ULN0-05010	1	32293	IH5010CPD	IH5010CPD SP4T SWITCH
IC	3	ULN0-05018	1	32293	IH5018CPA	IH5018CPA SPDT SWITCH
IC	4	UAN0-00100	1	13919	LOG 100JP	LOG 100JP LOG AMP
IC	5	UOG0-03510	1	13919	3510AM	3510AM LOW DRIFT OP AMP
IC	7	UAN0-00100	1	13919	LOG 100JP	LOG 100JP LOG AMP
IC	8	UON0-00074	1	01295	TL074CN	TL074CN QUAD FET OP AMP
Q	1	QBNS-00012	1	04713	MPSA12	MPSA12 20K HFE NPN
Q	2	QJNS-04091	1	04713	2N4091	2N4091 30OHM N CH JFET
Q	3	QBNS-00012	1	04713	MPSA12	MPSA12 20K HFE NPN
Q	5	QJNS-04091	1	04713	2N4091	2N4091 30OHM N CH JFET
R	1	RAPD-15000	1	73138	89PR5K	5K POT 15T PC MNT
R	2	RN55-31000	1	05905	SMA 0207 E 96	100 K OHMS 1% MET FILM
R	3	RN55-16810	1	05905	SMA 0207 E 96	6.81 K OHMS 1% MET FILM
R	4	RN55-31000	1	05905	SMA 0207 E 96	100 K OHMS 1% MET FILM
R	5	RN55-33010	1	05905	SMA 0207 E 96	301 K OHMS 1% MET FILM
R	6	RAPD-31000	1	73138	89PR100K	100K POT 15T PC MNT
R	7	RN55-31000	1	05905	SMA 0207 E 96	100 K OHMS 1% MET FILM
R	8	RN55-31000	1	05905	SMA 0207 E 96	100 K OHMS 1% MET FILM
R	9	RN55-24990	1	05905	SMA 0207 E 96	49.9 K OHMS 1% MET FILM
R	10	RN55-14990	1	05905	SMA 0207 E 96	4.99 K OHMS 1% MET FILM
R	11	RN55-31000	1	05905	SMA 0207 E 96	100 K OHMS 1% MET FILM
R	12	RN55-41000	1	05905	SMA 0207 E 96	1 M OHMS 1% MET FILM
R	14	RN55-41000	1	05905	SMA 0207 E 96	1 M OHMS 1% MET FILM
R	15	RAPD-31000	1	73138	89PR100K	100K POT 15T PC MNT
R	16	RN55-?????	1	05905	SMA 0207 E 96	SELECTED IN TEST
R	17	RN55-11000	1	05905	SMA 0207 E 96	1 K OHMS 1% MET FILM
R	18	RN55-16190	1	05905	SMA 0207 E 96	6.19 K OHMS 1% MET FILM
R	19	RN55-22490	1	05905	SMA 0207 E 96	24.9 K OHMS 1% MET FILM
R	20	RN55-31000	1	05905	SMA 0207 E 96	100 K OHMS 1% MET FILM
R	21	RN55-24990	1	05905	SMA 0207 E 96	49.9 K OHMS 1% MET FILM
R	22	RN55-31000	1	05905	SMA 0207 E 96	100 K OHMS 1% MET FILM

Parts List for LEVELLING LOG AMP ASSY No. 101CA25600 Rev. F

Item	Part Number	Qty	FSCM	Mfr's Part Number	Description
R 23	RN55-22800	1	05905	SMA 0207 E 96	28 K OHMS 1% MET FILM
R 24	RAPD-22000	1	73138	89PR20K	20K POT 15T PC MNT
R 25	RAPD-22000	1	73138	89PR20K	20K POT 15T PC MNT
R 26	RN55-14990	1	05905	SMA 0207 E 96	4.99 K OHMS 1% MET FILM
R 27	RAPD-22000	1	73138	89PR20K	20K POT 15T PC MNT
R 28	RAPD-15000	1	73138	89PR5K	5K POT 15T PC MNT
R 29	RAPD-21000	1	73138	89PR10K	10K POT 15T PC MNT
R 30	RN55-16810	1	05905	SMA 0207 E 96	6.81 K OHMS 1% MET FILM
R 31	RAPD-15000	1	73138	89PR5K	5K POT 15T PC MNT
R 32	RN55-21000	1	05905	SMA 0207 E 96	10 K OHMS 1% MET FILM
R 33	RN55-26810	1	05905	SMA 0207 E 96	68.1 K OHMS 1% MET FILM
R 34	RN55-14990	1	05905	SMA 0207 E 96	4.99 K OHMS 1% MET FILM
R 35	RN55-14990	1	05905	SMA 0207 E 96	4.99 K OHMS 1% MET FILM
R 36	RN55-41000	1	05905	SMA 0207 E 96	1 M OHMS 1% MET FILM
R 37	RN55-41000	1	05905	SMA 0207 E 96	1 M OHMS 1% MET FILM
R 38	RN55-21050	1	05905	SMA 0207 E 96	10.5 K OHMS 1% MET FILM
R 39	RN55-33010	1	05905	SMA 0207 E 96	301 K OHMS 1% MET FILM
R 40	RN55-31000	1	05905	SMA 0207 E 96	100 K OHMS 1% MET FILM
R 43	RN55-41000	1	05905	SMA 0207 E 96	1 M OHMS 1% MET FILM
R 44	RN55-16190	1	05905	SMA 0207 E 96	6.19 K OHMS 1% MET FILM
R 45	RAPD-31000	1	73138	89PR100K	100K POT 15T PC MNT
R 46	RN55-21000	1	05905	SMA 0207 E 96	10 K OHMS 1% MET FILM
R 47	RN55-22490	1	05905	SMA 0207 E 96	24.9 K OHMS 1% MET FILM
R 48	RN55-21000	1	05905	SMA 0207 E 96	10 K OHMS 1% MET FILM
R 49	RN55-31000	1	05905	SMA 0207 E 96	100 K OHMS 1% MET FILM
R 51	RAPD-22000	1	73138	89PR20K	20K POT 15T PC MNT
R 53	RN55-21000	1	05905	SMA 0207 E 96	10 K OHMS 1% MET FILM
R 56	RN55-23920	1	05905	SMA 0207 E 96	39.2 K OHMS 1% MET FILM
R 57	RN55-21000	1	05905	SMA 0207 E 96	10 K OHMS 1% MET FILM
R 61	RN55-28250	1	05905	SMA 0207 E 96	82.5 K OHMS 1% MET FILM
R 62	RN55-12210	1	05905	SMA 0207 E 96	2.21 K OHMS 1% MET FILM
VR 1	DRAE-00827	1	04713	1N827	1N827 6.2V REF. DIODE
VR 2	DZAD-04732	1	04713	1N4732A	1N4732A 4.7 V ZENER

Parts List for DIVIDE BY N PC ASSY No. 101CA06300 Rev. J

Item		Part Number	Qty	FSCM	Mfr's Part Number	Description
	1	101CF06300	1	58900	101CF06300	DIVIDE BY N BD
	2	HQH0-00010	6	05820	651-B	IC HEATSINK
C	1	CC50-02100	1	52763	EDPT-1000-Y5P10%	.001 UF CERAMIC Y5P
C	3	CK50-03100	1	96733	SG133BX103KS	.01 UF X7R CHIP
C	4	CC50-02100	1	52763	EDPT-1000-Y5P10%	.001 UF CERAMIC Y5P
C	5	CC50-00220	1	52763	EDPT-22-NP0-5%	22 PF CERAMIC NP0
C	6	CK50-03100	1	96733	SG133BX103KS	.01 UF X7R CHIP
C	7	CC50-02100	1	52763	EDPT-1000-Y5P10%	.001 UF CERAMIC Y5P
C	8	CC50-02100	1	52763	EDPT-1000-Y5P10%	.001 UF CERAMIC Y5P
C	9	CC50-00220	1	52763	EDPT-22-NP0-5%	22 PF CERAMIC NP0
C	10	CK50-03100	1	96733	SG133BX103KS	.01 UF X7R CHIP
C	11	CC50-02100	1	52763	EDPT-1000-Y5P10%	.001 UF CERAMIC Y5P
C	12	CC50-02100	1	52763	EDPT-1000-Y5P10%	.001 UF CERAMIC Y5P
C	13	CC50-00220	1	52763	EDPT-22-NP0-5%	22 PF CERAMIC NP0
C	14	CK50-03100	1	96733	SG133BX103KS	.01 UF X7R CHIP
C	15	CC50-02100	1	52763	EDPT-1000-Y5P10%	.001 UF CERAMIC Y5P
C	16	CC50-02100	1	52763	EDPT-1000-Y5P10%	.001 UF CERAMIC Y5P
C	18	CK50-03100	1	96733	SG133BX103KS	.01 UF X7R CHIP
C	19	CC50-02100	1	52763	EDPT-1000-Y5P10%	.001 UF CERAMIC Y5P
C	20	CC50-02100	1	52763	EDPT-1000-Y5P10%	.001 UF CERAMIC Y5P
C	21	CK50-03100	1	96733	SG133BX103KS	.01 UF X7R CHIP
C	22	CC50-00220	1	52763	EDPT-22-NP0-5%	22 PF CERAMIC NP0
C	23	CC50-02100	1	52763	EDPT-1000-Y5P10%	.001 UF CERAMIC Y5P
C	24	CC50-03100	1	51642	150-100-W5R-103K	.01 UF CERAMIC X7R
C	25	CC50-02100	1	52763	EDPT-1000-Y5P10%	.001 UF CERAMIC Y5P
C	26	CC50-02100	1	52763	EDPT-1000-Y5P10%	.001 UF CERAMIC Y5P
C	27	CC50-02100	1	52763	EDPT-1000-Y5P10%	.001 UF CERAMIC Y5P
C	28	CC50-02100	1	52763	EDPT-1000-Y5P10%	.001 UF CERAMIC Y5P
C	29	CC50-03100	1	51642	150-100-W5R-103K	.01 UF CERAMIC X7R
C	30	CC50-03100	1	51642	150-100-W5R-103K	.01 UF CERAMIC X7R
C	31	CC50-03100	1	51642	150-100-W5R-103K	.01 UF CERAMIC X7R
C	32	CC50-03100	1	51642	150-100-W5R-103K	.01 UF CERAMIC X7R
C	33	CC50-03100	1	51642	150-100-W5R-103K	.01 UF CERAMIC X7R
C	34	CC50-03100	1	51642	150-100-W5R-103K	.01 UF CERAMIC X7R
C	34	CC50-03100	1	51642	150-100-W5R-103K	.01 UF CERAMIC X7R
C	35	CC50-03100	1	51642	150-100-W5R-103K	.01 UF CERAMIC X7R
C	36	CC50-03100	1	51642	150-100-W5R-103K	.01 UF CERAMIC X7R
C	37	CT10-06390	1	56289	150D396X9010B2	39 UF 10V TANTALUM
C	38	CT20-06100	1	56289	150D106X9020B2	10 UF 20V TANTALUM
C	39	CC50-05100	1	56289	3CZ5U105X0050C5	1 UF CERAMIC Z5U
C	40	CC50-03470	1	51642	150-100-W5R-473	.047 UF CERAMIC X7R
C	41	CC50-01330	1	51642	150-100-C0G-331J	330 PF CERAMIC NP0
IC	1	UEN0-10131	1	04713	MC10131P	MC10131P DUAL D F/F
IC	2	UEN0-08743	1	52648	SP8743B	SP8743B 500MHZ 8/9 CTR
IC	3	UEN0-10109	1	04713	MC10109P	MC10109P DUAL OR/NOR
IC	4	UEN0-10136	1	04713	MC10136P	MC10136P HEX COUNTER
IC	5	UEN0-10136	1	04713	MC10136P	MC10136P HEX COUNTER
IC	6	UEN0-10131	1	04713	MC10131P	MC10131P DUAL D F/F
IC	7	UEN0-10124	1	04713	MC10124P	MC10124P QUAD TTL TO ECL
IC	8	UEN0-10124	1	04713	MC10124P	MC10124P QUAD TTL TO ECL
IC	9	UEN0-10102	1	04713	MC10102P	MC10102P QUAD NOR

Parts List for DIVIDE BY N PC ASSY No. 101CA06300 Rev. J

Item	Part Number	Qty	FSCM	Mfr's Part Number	Description
IC 10	UEN0-10124	1	04713	MC10124P	MC10124P QUAD TTL TO ECL
IC 11	UEN0-10102	1	04713	MC10102P	MC10102P QUAD NOR
J 1	JRBM-00101	1	98291	51-053-0000	SMB M RTANG PC MOUNT
Q 1	QBNS-06304	1	04713	2N6304	2N6304 15V 1400MHZ NPN
Q 2	QBNS-06304	1	04713	2N6304	2N6304 15V 1400MHZ NPN
Q 3	QBNS-06304	1	04713	2N6304	2N6304 15V 1400MHZ NPN
Q 4	QBNS-06304	1	04713	2N6304	2N6304 15V 1400MHZ NPN
Q 5	QBNS-06304	1	04713	2N6304	2N6304 15V 1400MHZ NPN
Q 6	QBNS-06304	1	04713	2N6304	2N6304 15V 1400MHZ NPN
Q 7	QBNS-06304	1	04713	2N6304	2N6304 15V 1400MHZ NPN
R 1	RN55-03920	1	05905	SMA 0207 E 96	392 OHMS 1% MET FILM
R 2	RN55-00221	1	05905	SMA 0207 E 96	22.1 OHMS 1% MET FILM
R 3	RN55-00681	1	05905	SMA 0207 E 96	68.1 OHMS 1% MET FILM
R 4	RN55-03320	1	05905	SMA 0207 E 96	332 OHMS 1% MET FILM
R 5	RN55-00221	1	05905	SMA 0207 E 96	22.1 OHMS 1% MET FILM
R 6	RN55-00681	1	05905	SMA 0207 E 96	68.1 OHMS 1% MET FILM
R 7	RN55-03320	1	05905	SMA 0207 E 96	332 OHMS 1% MET FILM
R 8	RN55-00221	1	05905	SMA 0207 E 96	22.1 OHMS 1% MET FILM
R 9	RN55-00681	1	05905	SMA 0207 E 96	68.1 OHMS 1% MET FILM
R 10	RN55-03320	1	05905	SMA 0207 E 96	332 OHMS 1% MET FILM
R 11	RN55-00221	1	05905	SMA 0207 E 96	22.1 OHMS 1% MET FILM
R 12	RN55-00681	1	05905	SMA 0207 E 96	68.1 OHMS 1% MET FILM
R 13	RN55-03320	1	05905	SMA 0207 E 96	332 OHMS 1% MET FILM
R 14	RN55-00221	1	05905	SMA 0207 E 96	22.1 OHMS 1% MET FILM
R 15	RN55-00681	1	05905	SMA 0207 E 96	68.1 OHMS 1% MET FILM
R 16	RN55-03320	1	05905	SMA 0207 E 96	332 OHMS 1% MET FILM
R 17	RN55-00221	1	05905	SMA 0207 E 96	22.1 OHMS 1% MET FILM
R 18	RN55-00562	1	05905	SMA 0207 E 96	56.2 OHMS 1% MET FILM
R 19	RN55-03320	1	05905	SMA 0207 E 96	332 OHMS 1% MET FILM
R 20	RN55-00475	1	05905	SMA 0207 E 96	47.5 OHMS 1% MET FILM
R 21	RN55-11500	1	05905	SMA 0207 E 96	1.5 K OHMS 1% MET FILM
R 22	RN55-05620	1	05905	SMA 0207 E 96	562 OHMS 1% MET FILM
R 23	RN55-03920	1	05905	SMA 0207 E 96	392 OHMS 1% MET FILM
R 24	RN55-00221	1	05905	SMA 0207 E 96	22.1 OHMS 1% MET FILM
R 25	RN55-00475	1	05905	SMA 0207 E 96	47.5 OHMS 1% MET FILM
R 26	RN55-11500	1	05905	SMA 0207 E 96	1.5 K OHMS 1% MET FILM
R 27	RN55-05620	1	05905	SMA 0207 E 96	562 OHMS 1% MET FILM
R 28	RN55-12210	1	05905	SMA 0207 E 96	2.21 K OHMS 1% MET FILM
R 29	RN55-12210	1	05905	SMA 0207 E 96	2.21 K OHMS 1% MET FILM
RM 1	RM7S-05600	1	71450	750-81-R560	560 OHM X 7 SIP NETWRK
RM 2	RM7S-05600	1	71450	750-81-R560	560 OHM X 7 SIP NETWRK
RM 3	RM7S-05600	1	71450	750-81-R560	560 OHM X 7 SIP NETWRK
RM 4	RM7S-05600	1	71450	750-81-R560	560 OHM X 7 SIP NETWRK
TP 1	ETST-06224	1	88245	1280B	TURRET TERMINAL

Parts List for ANALOG SWEEP #2 No. 106CA03902 Rev. A

Item		Part Number	Qty	FSCM	Mfr's Part Number	Description
C	1	CC50-03100	1	51642	150-100-W5R-103K	.01 UF CERAMIC X7R
C	2	CC50-05100	1	56289	3CZ5U105X0050C5	1 UF CERAMIC Z5U
C	3	CC50-01100	1	51642	150-100-C0G-101J	100 PF CERAMIC NPO
C	4	CC50-03100	1	51642	150-100-W5R-103K	.01 UF CERAMIC X7R
C	5	CC50-03100	1	51642	150-100-W5R-103K	.01 UF CERAMIC X7R
C	6	CC50-03100	1	51642	150-100-W5R-103K	.01 UF CERAMIC X7R
C	7	CC50-03100	1	51642	150-100-W5R-103K	.01 UF CERAMIC X7R
C	8	CC50-03100	1	51642	150-100-W5R-103K	.01 UF CERAMIC X7R
C	9	CC50-03100	1	51642	150-100-W5R-103K	.01 UF CERAMIC X7R
C	10	CC50-03100	1	51642	150-100-W5R-103K	.01 UF CERAMIC X7R
C	11	CC50-05100	1	56289	3CZ5U105X0050C5	1 UF CERAMIC Z5U
C	12	CC50-05100	1	56289	3CZ5U105X0050C5	1 UF CERAMIC Z5U
C	13	CC50-03100	1	51642	150-100-W5R-103K	.01 UF CERAMIC X7R
C	14	CC50-03100	1	51642	150-100-W5R-103K	.01 UF CERAMIC X7R
CR	1	DSA0-04148	1	07263	1N4148	1N4148 G.P. DIODE
U	1	UTN0-00001	1	01295	SN74LS00N	SN74LS00 QUAD NAND
U	2	UIN0-07542	1	24355	AD7542KN	AD7542KN 12 BIT D/A
U	3	UON0-00072	1	01295	TL072CP	TL072CP DUAL FET OP AMP
U	4	ULN0-05018	1	32293	IH5018CPA	IH5018CPA SPDT SWITCH
U	5	UIN0-07531	1	24355	AD7531KN	12 BIT PARALLEL MULT D/A
U	7	UIN0-07531	1	24355	AD7531KN	12 BIT PARALLEL MULT D/A
U	10	UTN0-00422	1	18714	74HCT42E	74HCT42 BCD TO DECIMAL
U	11	UTN0-03652	1	18714	74HCT365E	74HCT365 HEX BUFFER
U	12	UTN0-03652	1	18714	74HCT365E	74HCT365 HEX BUFFER
U	13	UTN0-03652	1	18714	74HCT365E	74HCT365 HEX BUFFER
U	14	UTN0-03652	1	18714	74HCT365E	74HCT365 HEX BUFFER
U	15	UMN0-06264	1	61485	HM6264LP-15	HM6264LP-15 8K X 8 RAM
U	16	UTN0-02452	1	18714	74HCT245E	74HCT245E 8X TRANSCEIVER
U	17	UMN0-06264	1	61485	HM6264LP-15	HM6264LP-15 8K X 8 RAM
U	18	UTN0-02452	1	18714	74HCT245E	74HCT245E 8X TRANSCEIVER

Parts List for ANALOG SWEEP #1 No. 106CA03901 Rev. A

Item	Part Number	Qty	FSCM	Mfr's Part Number	Description
C 1	CC50-05100	1	56289	3CZ5U105X0050C5	1 UF CERAMIC Z5U
C 2	CC50-04100	1	56289	2CZ5U104X0050C4	.1 UF CERAMIC Z5U
C 3	CC50-05100	1	56289	3CZ5U105X0050C5	1 UF CERAMIC Z5U
C 4	CC50-05100	1	56289	3CZ5U105X0050C5	1 UF CERAMIC Z5U
C 5	CC50-04100	1	56289	2CZ5U104X0050C4	.1 UF CERAMIC Z5U
C 6	CC50-?????	1	51642	150-100-COG-???J	SELECTED IN TEST
C 7	CC50-04100	1	56289	2CZ5U104X0050C4	.1 UF CERAMIC Z5U
C 8	CC50-04100	1	56289	2CZ5U104X0050C4	.1 UF CERAMIC Z5U
C 9	CC50-?????	1	51642	150-100-COG-???J	SELECTED IN TEST
C 10	CC50-01100	1	51642	150-100-COG-101J	100 PF CERAMIC NPO
C 11	CC50-04100	1	56289	2CZ5U104X0050C4	.1 UF CERAMIC Z5U
C 12	CC50-04100	1	56289	2CZ5U104X0050C4	.1 UF CERAMIC Z5U
C 13	CC50-04100	1	56289	2CZ5U104X0050C4	.1 UF CERAMIC Z5U
C 14	CC50-04100	1	56289	2CZ5U104X0050C4	.1 UF CERAMIC Z5U
C 15	CC50-04100	1	56289	2CZ5U104X0050C4	.1 UF CERAMIC Z5U
C 16	CC50-04100	1	56289	2CZ5U104X0050C4	.1 UF CERAMIC Z5U
C 17	CC50-04100	1	56289	2CZ5U104X0050C4	.1 UF CERAMIC Z5U
C 18	CC50-04100	1	56289	2CZ5U104X0050C4	.1 UF CERAMIC Z5U
C 19	CC50-04100	1	56289	2CZ5U104X0050C4	.1 UF CERAMIC Z5U
C 20	CC50-01100	1	51642	150-100-COG-101J	100 PF CERAMIC NPO
C 21	CC50-?????	1	51642	150-100-COG-???J	SELECTED IN TEST
C 22	CC50-04100	1	56289	2CZ5U104X0050C4	.1 UF CERAMIC Z5U
C 23	CC50-04100	1	56289	2CZ5U104X0050C4	.1 UF CERAMIC Z5U
C 24	CC50-04100	1	56289	2CZ5U104X0050C4	.1 UF CERAMIC Z5U
C 25	CC50-04100	1	56289	2CZ5U104X0050C4	.1 UF CERAMIC Z5U
C 26	CC50-04100	1	56289	2CZ5U104X0050C4	.1 UF CERAMIC Z5U
C 27	CC50-04100	1	56289	2CZ5U104X0050C4	.1 UF CERAMIC Z5U
C 28	CT10-06100	1	56289	150D106X9010B2	10 UF 10V TANTALUM
CR 1	DSA0-02810	1	28480	5082-2810	5082-2810 SCHOT. DIODE
R 1	RN55-08250	1	05905	SMA 0207 E 96	825 OHMS 1% MET FILM
R 2	RN55-?????	1	05905	SMA 0207 E 96	SELECTED IN TEST
R 3	RN55-22000	1	05905	SMA 0207 E 96	20 K OHMS 1% MET FILM
R 4	RN55-22000	1	05905	SMA 0207 E 96	20 K OHMS 1% MET FILM
R 5	RN55-01000	1	05905	SMA 0207 E 96	100 OHMS 1% MET FILM
R 6	RN55-21620	1	05905	SMA 0207 E 96	16.2 K OHMS 1% MET FILM
R 7	RN55-06650	1	05905	SMA 0207 E 96	665 OHMS 1% MET FILM
R 8	RN55-21370	1	05905	SMA 0207 E 96	13.7 K OHMS 1% MET FILM
R 9	RN55-21070	1	05905	SMA 0207 E 96	10.7 K OHMS 1% MET FILM
R 10	RN55-33010	1	05905	SMA 0207 E 96	301 K OHMS 1% MET FILM
R 11	RN55-31000	1	05905	SMA 0207 E 96	100 K OHMS 1% MET FILM
R 12	RN55-21000	1	05905	SMA 0207 E 96	10 K OHMS 1% MET FILM
R 13	RN55-01000	1	05905	SMA 0207 E 96	100 OHMS 1% MET FILM
R 14	RN55-21000	1	05905	SMA 0207 E 96	10 K OHMS 1% MET FILM
R 15	RN55-21000	1	05905	SMA 0207 E 96	10 K OHMS 1% MET FILM
R 16	RN55-21000	1	05905	SMA 0207 E 96	10 K OHMS 1% MET FILM
R 17	RN55-21000	1	05905	SMA 0207 E 96	10 K OHMS 1% MET FILM
R 18	RN55-21000	1	05905	SMA 0207 E 96	10 K OHMS 1% MET FILM
R 19	RN55-21000	1	05905	SMA 0207 E 96	10 K OHMS 1% MET FILM
U 1	UTN0-40402	1	04713	74HC4040	74HC4040 12 BIT COUNTER
U 2	UIN0-07531	1	24355	AD7531KN	12 BIT PARALLEL MULT D/A
U 3	UOG0-00027	1	24355	AD OP27GH	OP27GH LOW DRIFT OP AMP

Parts List for ANALOG SWEEP #1 No. 106CA03901 Rev. A

Item	Part Number	Qty	FSCM	Mfr's Part Number	Description
U 4	ULN0-05018	1	32293	IH5018CPA	IH5018CPA SPDT SWITCH
U 5	ULN0-05018	1	32293	IH5018CPA	IH5018CPA SPDT SWITCH
U 6	UON0-00072	1	01295	TL072CP	TL072CP DUAL FET OP AMP
U 7	UON0-00072	1	01295	TL072CP	TL072CP DUAL FET OP AMP
U 8	UTN0-00001	1	01295	SN74LS00N	SN74LS00 QUAD NAND
U 9	UTN0-00001	1	01295	SN74LS00N	SN74LS00 QUAD NAND
U 10	UTN0-00041	1	01295	SN74LS04N	SN74LS04 HEX INVERTER
U 11	UTN0-00742	1	18714	74HCT74E	74HCT74 DUAL D FLIP-FLOP
U 12	ULN0-05042	1	32293	IH5042CPE	IH5042CPE SPDT SWITCH
U 13	UCN0-04536	1	18714	CD4536BE	CD4536 24 STAGE TIMER
U 16	UON0-00072	1	01295	TL072CP	TL072CP DUAL FET OP AMP
U 17	UTN0-03732	1	01295	SN74HCT373N	74HCT373 OCTAL D F/F 3 ST
U 18	UTN0-03732	1	01295	SN74HCT373N	74HCT373 OCTAL D F/F 3 ST
U 19	UTN0-03732	1	01295	SN74HCT373N	74HCT373 OCTAL D F/F 3 ST

Parts List for DOWN CONV/LVL CORRN ASSY No. 106CA04100 Rev. A

Item	Part Number	Qty	FSCM	Mfr's Part Number	Description
C 1	CC50-03100	1	51642	150-100-W5R-103K	.01 UF CERAMIC X7R
C 2	CC50-?????	1	51642	150-100-COG-???J	SELECTED IN TEST
C 3	CC50-04100	1	56289	2CZ5U104X0050C4	.1 UF CERAMIC Z5U
C 4	CC50-04100	1	56289	2CZ5U104X0050C4	.1 UF CERAMIC Z5U
C 5	CC50-03100	1	51642	150-100-W5R-103K	.01 UF CERAMIC X7R
C 6	CC50-01100	1	51642	150-100-COG-101J	100 PF CERAMIC NPO
C 7	CC50-03100	1	51642	150-100-W5R-103K	.01 UF CERAMIC X7R
C 8	CC50-03100	1	51642	150-100-W5R-103K	.01 UF CERAMIC X7R
C 9	CC50-03100	1	51642	150-100-W5R-103K	.01 UF CERAMIC X7R
C 10	CC50-03100	1	51642	150-100-W5R-103K	.01 UF CERAMIC X7R
C 11	CC50-03100	1	51642	150-100-W5R-103K	.01 UF CERAMIC X7R
C 12	CC50-03100	1	51642	150-100-W5R-103K	.01 UF CERAMIC X7R
IC 1	UTN0-00322	1	18714	74HCT32E	74HCT32 QUAD 2 IN OR
IC 2	UON0-00072	1	01295	TL072CP	TL072CP DUAL FET OP AMP
IC 3	UTN0-00322	1	18714	74HCT32E	74HCT32 QUAD 2 IN OR
IC 4	UTN0-00082	1	18714	74HC08E	74HC08E QUAD AND
IC 5	UTN0-00002	1	18714	74HCT00E	74HCT00 QUAD 2 IN NAND
IC 6	UTN0-40402	1	04713	74HC4040	74HC4040 12 BIT COUNTER
IC 7	UTN0-03652	1	18714	74HCT365E	74HCT365 HEX BUFFER
IC 8	UTN0-03652	1	18714	74HCT365E	74HCT365 HEX BUFFER
IC 9	UTN0-03652	1	18714	74HCT365E	74HCT365 HEX BUFFER
IC 10	UTN0-03652	1	18714	74HCT365E	74HCT365 HEX BUFFER
IC 12	UTN0-00422	1	18714	74HCT42E	74HCT42 BCD TO DECIMAL
IC 13	UMN0-06264	1	61485	HM6264LP-15	HM6264LP-15 8K X 8 RAM
IC 14	UMN0-06264	1	61485	HM6264LP-15	HM6264LP-15 8K X 8 RAM
IC 15	UTN0-05412	1	04713	MC74HCT541P	MC74HCT541P OCTAL BUFFER
IC 16	UTN0-05412	1	04713	MC74HCT541P	MC74HCT541P OCTAL BUFFER
IC 17	UTN0-05412	1	04713	MC74HCT541P	MC74HCT541P OCTAL BUFFER
R 1	RAPD-11000	1	73138	89PR1K	1K POT 15T PC MNT
R 2	RN55-08250	1	05905	SMA 0207 E 96	825 OHMS 1% MET FILM
R 3	RN55-18250	1	05905	SMA 0207 E 96	8.25 K OHMS 1% MET FILM
R 4	RN55-12490	1	05905	SMA 0207 E 96	2.49 K OHMS 1% MET FILM
R 5	RN55-13160	1	05905	SMA 0207 E 96	3.16 K OHMS 1% MET FILM
R 6	RN55-13160	1	05905	SMA 0207 E 96	3.16 K OHMS 1% MET FILM
R 7	RN55-13160	1	05905	SMA 0207 E 96	3.16 K OHMS 1% MET FILM
VR 1	DRAE-00827	1	04713	1N827	IN827 6.2V REF. DIODE

Parts List for FM DRIVER No. 105BA17800 Rev. A

Item		Part Number	Qty	FSCM	Mfr's Part Number	Description
	1	105CF10200	1	58900	105CF10200	DRIVER/TRIGGER BD
C	12	CC50-05100	1	56289	3CZ5U105X0050C5	1 UF CERAMIC Z5U
C	13	CC50-05100	1	56289	3CZ5U105X0050C5	1 UF CERAMIC Z5U
C	14	CC50-05100	1	56289	3CZ5U105X0050C5	1 UF CERAMIC Z5U
C	15	CC50-05100	1	56289	3CZ5U105X0050C5	1 UF CERAMIC Z5U
C	16	CC50-05100	1	56289	3CZ5U105X0050C5	1 UF CERAMIC Z5U
C	17	CC50-05100	1	56289	3CZ5U105X0050C5	1 UF CERAMIC Z5U
C	18	CC50-02470	1	51642	200-100-W5R-472K	.0047 UF CERAMIC X7R
IC	5	ULN0-05042	1	32293	IH5042CPE	IH5042CPE SPDT SWITCH
Q	1	QBPP-06554	1	04713	2N6554	2N6554 1A 60V 10W PNP
Q	2	QBNP-06551	1	04713	2N6551	2N6551 1A 60V 10W NPN
Q	3	QBNS-03643	1	27014	PN3643	PN3643 .5A 30V .6W NPN
Q	4	QBPS-03645	1	27014	PN3645	PN3645 .5A 60V .6W PNP
Q	5	QBPP-06554	1	04713	2N6554	2N6554 1A 60V 10W PNP
Q	6	QBNP-06551	1	04713	2N6551	2N6551 1A 60V 10W NPN
Q	7	QBNS-03643	1	27014	PN3643	PN3643 .5A 30V .6W NPN
Q	8	QBPS-03645	1	27014	PN3645	PN3645 .5A 60V .6W PNP
R	11	RC20-01000	1	01121	EB-101-5	100 OHM 5% 1/2W CARBON
R	12	RW03-00330	1	91637	RS-2B-33-1	33 OHM 2W WIREWOUND
R	13	RC20-00160	1	01121	EB-160-5	16 OHMS 5% 1/2W CARBON
R	14	RN55-21000	1	05905	SMA 0207 E 96	10 K OHMS 1% MET FILM
R	15	RN55-01210	1	05905	SMA 0207 E 96	121 OHMS 1% MET FILM
R	16	RN55-21000	1	05905	SMA 0207 E 96	10 K OHMS 1% MET FILM
R	17	RC20-00160	1	01121	EB-160-5	16 OHMS 5% 1/2W CARBON
R	18	RC20-00160	1	01121	EB-160-5	16 OHMS 5% 1/2W CARBON
R	19	RN55-21000	1	05905	SMA 0207 E 96	10 K OHMS 1% MET FILM
R	20	RN55-01210	1	05905	SMA 0207 E 96	121 OHMS 1% MET FILM
R	21	RN55-21000	1	05905	SMA 0207 E 96	10 K OHMS 1% MET FILM
R	22	RC20-00160	1	01121	EB-160-5	16 OHMS 5% 1/2W CARBON
R	23	RW03-00420	1	91637	RS-2B-42-1	42 OHM 2W WIREWOUND

Parts List for POWER SUPPLY A101 PC ASSY No. 101BA06400 Rev. A

Item		Part Number	Qty	FSCM	Mfr's Part Number	Description
	1	101BF06400	1	58900	101BF06400	POWER SUPPLY A101 BD
	2	ETSB-06224	21	88245	1309B	BIFURCATED TERMINAL 15/64
	3	HSCS-60404	2	06540	9533B-A-140	#6 X 1/4 SWAGE CLR SPACER
C	1	CC50-05100	1	56289	3CZ5U105X0050C5	1 UF CERAMIC Z5U
C	2	CT20-06100	1	56289	150D106X9020B2	10 UF 20V TANTALUM
C	3	CC50-04100	1	56289	2CZ5U104X0050C4	.1 UF CERAMIC Z5U
C	4	CT20-06100	1	56289	150D106X9020B2	10 UF 20V TANTALUM
C	5	CC50-04100	1	56289	2CZ5U104X0050C4	.1 UF CERAMIC Z5U
C	6	CC50-05100	1	56289	3CZ5U105X0050C5	1 UF CERAMIC Z5U
C	7	CT20-06100	1	56289	150D106X9020B2	10 UF 20V TANTALUM
C	8	CC50-04100	1	56289	2CZ5U104X0050C4	.1 UF CERAMIC Z5U
C	9	CC50-05100	1	56289	3CZ5U105X0050C5	1 UF CERAMIC Z5U
C	10	CT20-06100	1	56289	150D106X9020B2	10 UF 20V TANTALUM
C	11	CC50-04100	1	56289	2CZ5U104X0050C4	.1 UF CERAMIC Z5U
C	12	CC50-05100	1	56289	3CZ5U105X0050C5	1 UF CERAMIC Z5U
C	13	CT20-06100	1	56289	150D106X9020B2	10 UF 20V TANTALUM
C	14	CC50-04100	1	56289	2CZ5U104X0050C4	.1 UF CERAMIC Z5U
C	15	CT10-06390	1	56289	150D396X9010B2	39 UF 10V TANTALUM
CR	1	DPAB-05391	1	04713	1N5391	IN5391 1.5A 35V DIODE
CR	2	DPAB-05391	1	04713	1N5391	IN5391 1.5A 35V DIODE
CR	3	DPAB-05391	1	04713	1N5391	IN5391 1.5A 35V DIODE
CR	4	DPAB-05391	1	04713	1N5391	IN5391 1.5A 35V DIODE
CR	5	DPAB-05391	1	04713	1N5391	IN5391 1.5A 35V DIODE
R	1	RN55-13320	1	05905	SMA 0207 E 96	3.32 K OHMS 1% MET FILM
R	2	RN55-02210	1	05905	SMA 0207 E 96	221 OHMS 1% MET FILM
R	3	RN55-12430	1	05905	SMA 0207 E 96	2.43 K OHMS 1% MET FILM
R	4	RN55-02210	1	05905	SMA 0207 E 96	221 OHMS 1% MET FILM
R	5	RN55-12430	1	05905	SMA 0207 E 96	2.43 K OHMS 1% MET FILM
R	6	RN55-02210	1	05905	SMA 0207 E 96	221 OHMS 1% MET FILM
R	7	RN55-06650	1	05905	SMA 0207 E 96	665 OHMS 1% MET FILM
R	8	RN55-02210	1	05905	SMA 0207 E 96	221 OHMS 1% MET FILM
R	9	RW03-00820	1	91637	RS-2B-82-1	82 OHM 2W WIREWOUND
R	10	RN55-06650	1	05905	SMA 0207 E 96	665 OHMS 1% MET FILM
R	11	RN55-02210	1	05905	SMA 0207 E 96	221 OHMS 1% MET FILM

Parts List for POWER SUPPLY A102 PC ASSY No. 101BA06500 Rev. C

Item		Part Number	Qty	FSCM	Mfr's Part Number	Description
	1	101BF06500	1	58900	101BF06500	POWER SUPPLY A102 BD
	2	ETSB-06216	31	88245	2000B	BIFURCATED TERMINAL 5/32
	3	HSCS-60404	4	06540	9533B-A-140	#6 X 1/4 SWAGE CLR SPACER
	4	HQWC-01260	3	04173	B52200F006	TO126 DOME WASHER
C	1	CT10-06390	1	56289	150D396X9010B2	39 UF 10V TANTALUM
C	2	CE63-07220	1	25088	220/63/82000	220 UF 63V ELECT.
C	3	CC50-05100	1	56289	3CZ5U105X0050C5	1 UF CERAMIC Z5U
CR	1	DPAB-05391	1	04713	1N5391	IN5391 1.5A 35V DIODE
CR	2	DPAB-05391	1	04713	1N5391	IN5391 1.5A 35V DIODE
CR	3	DPAB-05391	1	04713	1N5391	IN5391 1.5A 35V DIODE
CR	4	DPAB-05391	1	04713	1N5391	IN5391 1.5A 35V DIODE
CR	5	DPAB-05391	1	04713	1N5391	IN5391 1.5A 35V DIODE
CR	6	DSA0-04148	1	07263	1N4148	IN4148 G.P. DIODE
IC	1	URP0-79050	1	04713	MC79L05	MC79L05 .1A -5V REG
Q	1	QBPP-05193	1	04713	2N5193	2N5193 4A 40V 40W PNP
Q	2	QBNP-05190	1	04713	2N5190	2N5190 4A 40V 40W NPN
Q	3	QBPP-05193	1	04713	2N5193	2N5193 4A 40V 40W PNP
Q	4	QBPS-02907	1	27014	PN2907	PN2907 .5A 40V .6W PNP
Q	5	QBNS-00042	1	04713	MPSA42	MPSA42 300V NPN
Q	6	QTTS-00924	1	04713	MAC92-4	MAC92-4 .45A 200V TRIAC
R	1	RW03-08000	1	91637	RS-2B-800-1	800 OHM 2W WIREWOUND
R	2	RW03-08000	1	91637	RS-2B-800-1	800 OHM 2W WIREWOUND
R	3	RN55-04750	1	05905	SMA 0207 E 96	475 OHMS 1% MET FILM
R	5	RN55-22740	1	05905	SMA 0207 E 96	27.4 K OHMS 1% MET FILM
R	6	RN55-11000	1	05905	SMA 0207 E 96	1 K OHMS 1% MET FILM
R	7	RN55-24750	1	05905	SMA 0207 E 96	47.5 K OHMS 1% MET FILM
R	8	RN55-16810	1	05905	SMA 0207 E 96	6.81 K OHMS 1% MET FILM
R	9	RN55-16810	1	05905	SMA 0207 E 96	6.81 K OHMS 1% MET FILM
R	10	RC07-00470	1	01121	CB-470-5	47 OHMS 5% 1/4W CARBON
VR	1	DZAD-04728	1	04713	1N4728	IN4728 3.3 V ZENER
VR	2	DZAD-04753	1	04713	1N4753	IN4753 36 V ZENER

Parts List for 100 MHZ MODULE PC ASSY No. 101CA04200 Rev. H

	Item	Part Number	Qty	FSCM	Mfr's Part Number	Description
	1	101CF04200	1	58900	101CF04200	100MHZ MODULE BD
	2	ETSB-06216	24	88245	2000B	BIFURCATED TERMINAL 5/32
C	1	CC50-02100	1	52763	EDPT-1000-Y5P10%	.001 UF CERAMIC Y5P
C	2	CC50-02100	1	52763	EDPT-1000-Y5P10%	.001 UF CERAMIC Y5P
C	3	CC50-02100	1	52763	EDPT-1000-Y5P10%	.001 UF CERAMIC Y5P
C	4	CC50-02100	1	52763	EDPT-1000-Y5P10%	.001 UF CERAMIC Y5P
C	5	CC50-05100	1	56289	3CZ5U105X0050C5	1 UF CERAMIC Z5U
C	6	CT20-06100	1	56289	150D106X9020B2	10 UF 20V TANTALUM
C	7	CC50-05100	1	56289	3CZ5U105X0050C5	1 UF CERAMIC Z5U
C	8	CC50-00150	1	52763	EDPT-15-NPO-5%	15 PF CERAMIC NPO
C	9	CC50-00180	1	51642	150-100-COG-180J	18 PF CERAMIC NPO
C	10	CC50-00100	1	51642	100-100-COG-100J	10 PF CERAMIC NPO
C	11	CT20-06100	1	56289	150D106X9020B2	10 UF 20V TANTALUM
C	12	CC50-05100	1	56289	3CZ5U105X0050C5	1 UF CERAMIC Z5U
C	13	CC50-05100	1	56289	3CZ5U105X0050C5	1 UF CERAMIC Z5U
C	14	CC50-03100	1	51642	150-100-W5R-103K	.01 UF CERAMIC X7R
C	15	CC50-03100	1	51642	150-100-W5R-103K	.01 UF CERAMIC X7R
C	16	CT20-06100	1	56289	150D106X9020B2	10 UF 20V TANTALUM
C	17	CT20-06100	1	56289	150D106X9020B2	10 UF 20V TANTALUM
C	18	CC50-05100	1	56289	3CZ5U105X0050C5	1 UF CERAMIC Z5U
C	19	CC50-05100	1	56289	3CZ5U105X0050C5	1 UF CERAMIC Z5U
C	20	CC50-00330	1	52763	EDPT-33-NPO-5%	33 PF CERAMIC NPO
C	21	CC50-00150	1	52763	EDPT-15-NPO-5%	15 PF CERAMIC NPO
C	22	CC50-00330	1	52763	EDPT-33-NPO-5%	33 PF CERAMIC NPO
C	23	CV00-01012	1	18736	EF12	1-12 PF VARIABLE
C	24	CC50-05100	1	56289	3CZ5U105X0050C5	1 UF CERAMIC Z5U
C	25	CC50-02100	1	52763	EDPT-1000-Y5P10%	.001 UF CERAMIC Y5P
C	26	CC50-00047	1	51642	100-100-COG-479J	4.7PF CERAMIC NPO
C	27	CC50-00100	1	51642	100-100-COG-100J	10 PF CERAMIC NPO
C	28	CC50-02100	1	52763	EDPT-1000-Y5P10%	.001 UF CERAMIC Y5P
C	29	CC50-02100	1	52763	EDPT-1000-Y5P10%	.001 UF CERAMIC Y5P
C	30	CC50-02100	1	52763	EDPT-1000-Y5P10%	.001 UF CERAMIC Y5P
C	31	CC50-02100	1	52763	EDPT-1000-Y5P10%	.001 UF CERAMIC Y5P
C	32	CV00-09035	1	72982	538011D 9-35	9-35 PF VARIABLE
C	33	CV00-09035	1	72982	538011D 9-35	9-35 PF VARIABLE
C	34	CC50-02100	1	52763	EDPT-1000-Y5P10%	.001 UF CERAMIC Y5P
C	35	CC50-02100	1	52763	EDPT-1000-Y5P10%	.001 UF CERAMIC Y5P
C	36	CT20-06100	1	56289	150D106X9020B2	10 UF 20V TANTALUM
C	37	CC50-02100	1	52763	EDPT-1000-Y5P10%	.001 UF CERAMIC Y5P
C	38	CC50-02100	1	52763	EDPT-1000-Y5P10%	.001 UF CERAMIC Y5P
C	39	CC50-00680	1	51642	150-100-COG-680J	68 PF CERAMIC NPO
C	40	CC50-02100	1	52763	EDPT-1000-Y5P10%	.001 UF CERAMIC Y5P
C	41	CC50-02100	1	52763	EDPT-1000-Y5P10%	.001 UF CERAMIC Y5P
C	42	CC50-00680	1	51642	150-100-COG-680J	68 PF CERAMIC NPO
C	43	CC50-02100	1	52763	EDPT-1000-Y5P10%	.001 UF CERAMIC Y5P
C	44	CC50-02100	1	52763	EDPT-1000-Y5P10%	.001 UF CERAMIC Y5P
C	45	CC50-02100	1	52763	EDPT-1000-Y5P10%	.001 UF CERAMIC Y5P
C	46	CC50-02100	1	52763	EDPT-1000-Y5P10%	.001 UF CERAMIC Y5P
C	47	CC50-05100	1	56289	3CZ5U105X0050C5	1 UF CERAMIC Z5U
C	48	CT20-06100	1	56289	150D106X9020B2	10 UF 20V TANTALUM
C	49	CC50-00150	1	52763	EDPT-15-NPO-5%	15 PF CERAMIC NPO

Parts List for 100 MHZ MODULE PC ASSY No. 101CA04200 Rev. H

Item	Part Number	Qty	FSCM	Mfr's Part Number	Description
C 50	CC50-00180	1	51642	150-100-COG-180J	18 PF CERAMIC NPO
C 51	CT20-06100	1	56289	150D106X9020B2	10 UF 20V TANTALUM
C 52	CC50-05100	1	56289	3CZ5U105X0050C5	1 UF CERAMIC Z5U
C 53	CC50-00470	1	52763	EDPT-47-NPO-5%	47 PF CERAMIC NPO
C 54	CC50-05100	1	56289	3CZ5U105X0050C5	1 UF CERAMIC Z5U
C 55	CC50-03100	1	51642	150-100-W5R-103K	.01 UF CERAMIC X7R
C 56	CC50-03100	1	51642	150-100-W5R-103K	.01 UF CERAMIC X7R
C 57	CC50-00470	1	52763	EDPT-47-NPO-5%	47 PF CERAMIC NPO
C 58	CC50-00470	1	52763	EDPT-47-NPO-5%	47 PF CERAMIC NPO
C 59	CC50-04100	1	56289	2CZ5U104X0050C4	.1 UF CERAMIC Z5U
C 60	CC50-04100	1	56289	2CZ5U104X0050C4	.1 UF CERAMIC Z5U
C 61	CC50-05100	1	56289	3CZ5U105X0050C5	1 UF CERAMIC Z5U
C 62	CC50-03100	1	51642	150-100-W5R-103K	.01 UF CERAMIC X7R
C 63	CC50-03100	1	51642	150-100-W5R-103K	.01 UF CERAMIC X7R
C 64	CC50-00100	1	51642	100-100-COG-100J	10 PF CERAMIC NPO
CR 1	DVA0-00209	1	04713	MV209	MV209 3-30 PF DIODE
CR 2	DSA0-02810	1	28480	5082-2810	5082-2810 SCHOT. DIODE
HR 1	Y18H-00150	1	12020	PCL1-43-15-60	15V HC18 XTAL OVEN
IC 1	UEN0-10216	1	04713	MC10216P	MC10216P TRIPLE RCVR
IC 2	UANP-00733	1	07263	UA733DC	UA733DC VIDEO AMP
IC 3	URP0-78120	1	04713	MC78L12	MC78L12 .1A 12V REG
IC 4	UEN0-10216	1	04713	MC10216P	MC10216P TRIPLE RCVR
IC 5	UEN0-10216	1	04713	MC10216P	MC10216P TRIPLE RCVR
IC 6	UANP-00733	1	07263	UA733DC	UA733DC VIDEO AMP
L 1	LAD0-05270	1	72259	WEE-2.7	2.7 UH INDUCTOR
L 2	LAD0-05270	1	72259	WEE-2.7	2.7 UH INDUCTOR
L 3	LAD0-?????	1	58900	XXXXX	SELECTED IN TEST
L 4	LAD0-?????	1	58900	XXXXX	SELECTED IN TEST
L 6	LAD0-06270	1	72259	WEE-27	27 UH INDUCTOR
Q 1	QBNS-06304	1	04713	2N6304	2N6304 15V 1400MHZ NPN
Q 2	QBNS-06304	1	04713	2N6304	2N6304 15V 1400MHZ NPN
Q 3	QBNS-04275	1	27014	PN4275	PN4275 .1A 15V .6W NPN
Q 4	QBNS-04275	1	27014	PN4275	PN4275 .1A 15V .6W NPN
Q 5	QBNS-04275	1	27014	PN4275	PN4275 .1A 15V .6W NPN
Q 6	QBNS-04275	1	27014	PN4275	PN4275 .1A 15V .6W NPN
Q 7	QBNS-06304	1	04713	2N6304	2N6304 15V 1400MHZ NPN
R 1	RN55-05620	1	05905	SMA 0207 E 96	562 OHMS 1% MET FILM
R 2	RN55-03320	1	05905	SMA 0207 E 96	332 OHMS 1% MET FILM
R 3	RN55-03320	1	05905	SMA 0207 E 96	332 OHMS 1% MET FILM
R 4	RN55-05620	1	05905	SMA 0207 E 96	562 OHMS 1% MET FILM
R 5	RN55-11000	1	05905	SMA 0207 E 96	1 K OHMS 1% MET FILM
R 6	RN55-11000	1	05905	SMA 0207 E 96	1 K OHMS 1% MET FILM
R 7	RN55-05620	1	05905	SMA 0207 E 96	562 OHMS 1% MET FILM
R 8	RN55-05620	1	05905	SMA 0207 E 96	562 OHMS 1% MET FILM
R 9	RN55-15620	1	05905	SMA 0207 E 96	5.62 K OHMS 1% MET FILM
R 10	RN55-02740	1	05905	SMA 0207 E 96	274 OHMS 1% MET FILM
R 11	RN55-00100	1	05905	SMA 0207 E 96	10 OHMS 1% MET FILM
R 12	RN55-12210	1	05905	SMA 0207 E 96	2.21 K OHMS 1% MET FILM
R 13	RN55-32000	1	05905	SMA 0207 E 96	200 K OHMS 1% MET FILM
R 14	RN55-21000	1	05905	SMA 0207 E 96	10 K OHMS 1% MET FILM
R 15	RN55-22210	1	05905	SMA 0207 E 96	22.1 K OHMS 1% MET FILM

Parts List for 100 MHZ MODULE PC ASSY No. 101CA04200 Rev. H

Item	Part Number	Qty	FSCM	Mfr's Part Number	Description
R 16	RN55-14750	1	05905	SMA 0207 E 96	4.75 K OHMS 1% MET FILM
R 17	RN55-05620	1	05905	SMA 0207 E 96	562 OHMS 1% MET FILM
R 18	RN55-21000	1	05905	SMA 0207 E 96	10 K OHMS 1% MET FILM
R 19	RN55-12740	1	05905	SMA 0207 E 96	2.74 K OHMS 1% MET FILM
R 20	RN55-13920	1	05905	SMA 0207 E 96	3.92 K OHMS 1% MET FILM
R 21	RN55-03320	1	05905	SMA 0207 E 96	332 OHMS 1% MET FILM
R 22	RN55-03320	1	05905	SMA 0207 E 96	332 OHMS 1% MET FILM
R 23	RN55-11300	1	05905	SMA 0207 E 96	1.3 K OHMS 1% MET FILM
R 24	RN55-01500	1	05905	SMA 0207 E 96	150 OHMS 1% MET FILM
R 25	RN55-01500	1	05905	SMA 0207 E 96	150 OHMS 1% MET FILM
R 26	RN55-01000	1	05905	SMA 0207 E 96	100 OHMS 1% MET FILM
R 27	RN55-01000	1	05905	SMA 0207 E 96	100 OHMS 1% MET FILM
R 28	RN55-03320	1	05905	SMA 0207 E 96	332 OHMS 1% MET FILM
R 29	RN55-03320	1	05905	SMA 0207 E 96	332 OHMS 1% MET FILM
R 30	RN55-01000	1	05905	SMA 0207 E 96	100 OHMS 1% MET FILM
R 31	RN55-01000	1	05905	SMA 0207 E 96	100 OHMS 1% MET FILM
R 32	RN55-05620	1	05905	SMA 0207 E 96	562 OHMS 1% MET FILM
R 33	RN55-03320	1	05905	SMA 0207 E 96	332 OHMS 1% MET FILM
R 34	RN55-03320	1	05905	SMA 0207 E 96	332 OHMS 1% MET FILM
R 35	RN55-11000	1	05905	SMA 0207 E 96	1 K OHMS 1% MET FILM
R 36	RN55-11000	1	05905	SMA 0207 E 96	1 K OHMS 1% MET FILM
R 37	RN55-05620	1	05905	SMA 0207 E 96	562 OHMS 1% MET FILM
R 38	RN55-05620	1	05905	SMA 0207 E 96	562 OHMS 1% MET FILM
R 39	RN55-05620	1	05905	SMA 0207 E 96	562 OHMS 1% MET FILM
R 40	RN55-15620	1	05905	SMA 0207 E 96	5.62 K OHMS 1% MET FILM
R 41	RN55-02740	1	05905	SMA 0207 E 96	274 OHMS 1% MET FILM
R 42	RN55-00100	1	05905	SMA 0207 E 96	10 OHMS 1% MET FILM
R 43	RN55-12210	1	05905	SMA 0207 E 96	2.21 K OHMS 1% MET FILM
R 44	RN55-32000	1	05905	SMA 0207 E 96	200 K OHMS 1% MET FILM
R 45	RN55-00100	1	05905	SMA 0207 E 96	10 OHMS 1% MET FILM
R 46	RN55-00100	1	05905	SMA 0207 E 96	10 OHMS 1% MET FILM
Y 1	Y180-10000	1	00809	C189-1	100MHZ 5TH OVTN XTAL

Parts List for DISPLAY PC ASSY No. 101CA03000 Rev. B

Item		Part Number	Qty	FSCM	Mfr's Part Number	Description
	1	101BF03000	1	58900	101BF03000	DISPLAY BD
	2	JSP0-10018	4	09922	DILB18P-108	18 PIN DIP SOCKET
	3	JSPR-10016	2	06776	ICN163S3T	16 PIN DIP CLIP SOCKET
	4	JSPR-90016	2	06776	RC76	16 PIN RETAINER CLIP
	5	101BF05400	2	58900	101BF05400	DISPLAY MOUNT END
	6	101BF05500	1	58900	101BF05500	DISPLAY MOUNT CENTER
	7	HSTX-44004	4	88245	A1591B	4-40 CORNR BLOCK 1/16 MTL
	8	ETSB-06216	6	88245	2000B	BIFURCATED TERMINAL 5/32
C	1	CE50-07100	1	90201	TC3501D	100UF 50V ELECT.
DS	1	IMF0-00090	1	F0001	9LT-03	9 DIGIT FLUOR DISPLAY
DS	2	IMF0-00050	1	F0001	5LT-03	5 DIGIT FLUOR DISPLAY
IC	1	UIN0-00594	1	18364	NE594N	NE594 8X DISP DRIVE
IC	2	UIN0-00594	1	18364	NE594N	NE594 8X DISP DRIVE
IC	3	UIN0-00594	1	18364	NE594N	NE594 8X DISP DRIVE
IC	4	UIN0-00594	1	18364	NE594N	NE594 8X DISP DRIVE
R	1	RN55-02210	1	05905	SMA 0207 E 96	221 OHMS 1% MET FILM

Parts List for LEVER SWITCH PC ASSY No. 101BA02700 Rev. A

Item	Part Number	Qty	FSCM	Mfr's Part Number	Description
1	101BF02700	1	58900	101BF02700	LEVER SWITCH BD
3	101BC12701	2	58900	101BC12701	LEVER SWITCH 5 DIGIT
4	DSA0-04148	40	07263	1N4148	IN4148 G.P. DIODE
5	JSP0-10016	1	09922	DILB16P-108	16 PIN DIP SOCKET

Parts List for START FREQ HOLD PC ASSY No. 106BA01800 Rev. C

Item		Part Number	Qty	FSCM	Mfr's Part Number	Description
	1	106BF01800	1	58900	106BF01800	START FREQ HOLD BD
	2	ETSB-06216	11	88245	2000B	BIFURCATED TERMINAL 5/32
C	1	CC50-03100	1	51642	150-100-W5R-103K	.01 UF CERAMIC X7R
C	3	CC50-?????	1	51642	150-100-COG-???J	SELECTED IN TEST
C	4	CC50-05100	1	56289	3CZ5U105X0050C5	1 UF CERAMIC Z5U
C	5	CC50-?????	1	51642	150-100-COG-???J	SELECTED IN TEST
C	6	CC50-03100	1	51642	150-100-W5R-103K	.01 UF CERAMIC X7R
C	7	CC50-03100	1	51642	150-100-W5R-103K	.01 UF CERAMIC X7R
C	8	CC50-03100	1	51642	150-100-W5R-103K	.01 UF CERAMIC X7R
C	9	CC50-03100	1	51642	150-100-W5R-103K	.01 UF CERAMIC X7R
IC	1	ULN0-00311	1	27014	LM311N	LM311N COMPARATOR
IC	2	UTN0-01322	1	01295	SN74HC132N	SN74HC132N 4X SCHMIDT NAN
IC	3	UTN0-00741	1	01295	SN74LS74N	SN74LS74 DUAL D F/F
IC	4	UON0-00072	1	01295	TL072CP	TL072CP DUAL FET OP AMP
IC	5	UIN0-00010	1	50721	DAC-IC10BC	DAC-IC10BC 10 BIT D/A
IC	6	UTN0-40402	1	04713	74HC4040	74HC4040 12 BIT COUNTER
R	1	RN55-14990	1	05905	SMA 0207 E 96	4.99 K OHMS 1% MET FILM
R	2	RN55-?????	1	05905	SMA 0207 E 96	SELECTED IN TEST
R	3	RN55-13160	1	05905	SMA 0207 E 96	3.16 K OHMS 1% MET FILM
R	4	RN55-13160	1	05905	SMA 0207 E 96	3.16 K OHMS 1% MET FILM
R	5	RN55-13160	1	05905	SMA 0207 E 96	3.16 K OHMS 1% MET FILM
R	6	RN55-13160	1	05905	SMA 0207 E 96	3.16 K OHMS 1% MET FILM
R	7	RN55-11000	1	05905	SMA 0207 E 96	1 K OHMS 1% MET FILM
VR	1	DRAE-00827	1	04713	1N827	1N827 6.2V REF. DIODE

Parts List for ADDRESS SWITCH ASSY No. 101BA04700 Rev. D

Item	Part Number	Qty	FSCM	Mfr's Part Number	Description
1	101BF04700	1	58900	101BF04700	ADDRESS SWITCH BD
2	SDP0-00501	1	71450	206-5	5 SPST DIP SWITCH
3	JSPR-10016	1	06776	ICN163S3T	16 PIN DIP CLIP SOCKET
4	JSPR-90016	1	06776	RC76	16 PIN RETAINER CLIP
5	HSTS-60304	2	06540	9532B-A-0632	6-32 X 3/16 SWAGE SPACER

Parts List for TCXO PC ASSY No. 101BA09700 Rev. A

Item		Part Number	Qty	FSCM	Mfr's Part Number	Description
	1	101BF09700	1	58900	101BF09700	TCXO BD
	2	HSTS-40204	4	06540	9531B-A-0440	4-40 X 1/8 SWAGE SPACER
	3	ETSB-06216	3	88245	2000B	BIFURCATED TERMINAL 5/32
C	1	CC50-04100	1	56289	2CZ5U104X0050C4	.1 UF CERAMIC Z5U
C	2	CT20-06100	1	56289	150D106X9020B2	10 UF 20V TANTALUM
IC	1	URP0-78120	1	04713	MC78L12	MC78L12 .1A 12V REG
X	1	101BC18300	1	58900	101BC18300	10 MHZ TCXO SPECIFICATION

Parts List for DETECTOR TEMP COMP ASSY No. 101BA29400 Rev. A

Item		Part Number	Qty	FSCM	Mfr's Part Number	Description
	1	101BF29400	1	58900	101BF29400	DETECTOR TEMP COMP BD
	2	ETSB-06216	6	88245	2000B	BIFURCATED TERMINAL 5/32
C	1	CC50-05100	1	56289	3CZ5U105X0050C5	1 UF CERAMIC Z5U
C	2	CC50-05100	1	56289	3CZ5U105X0050C5	1 UF CERAMIC Z5U
CR	1	DSA0-04148	1	07263	1N4148	IN4148 G.P. DIODE
IC	1	ULP0-00335	1	02091	LM335Z	TEMP. SENS
IC	2	UON0-00072	1	01295	TL072CP	TL072CP DUAL FET OP AMP
IC	3	ULN0-05018	1	32293	IH5018CPA	IH5018CPA SPDT SWITCH
J	1	JSP0-10016	1	09922	DILB16P-108	16 PIN DIP SOCKET
R	1	RN55-21000	1	05905	SMA 0207 E 96	10 K OHMS 1% MET FILM
R	2	RN55-21000	1	05905	SMA 0207 E 96	10 K OHMS 1% MET FILM
R	3	RN55-21000	1	05905	SMA 0207 E 96	10 K OHMS 1% MET FILM
R	4	RAPD-22000	1	73138	89PR20K	20K POT 15T PC MNT
R	5	RN55-11000	1	05905	SMA 0207 E 96	1 K OHMS 1% MET FILM
R	6	RN55-31000	1	05905	SMA 0207 E 96	100 K OHMS 1% MET FILM
R	7	RN55-31000	1	05905	SMA 0207 E 96	100 K OHMS 1% MET FILM
R	8	RN55-31000	1	05905	SMA 0207 E 96	100 K OHMS 1% MET FILM
R	9	RN55-?????	1	00000	XXXXX	SELECTED IN TEST
R	10	RN55-?????	1	00000	XXXXX	SELECTED IN TEST
R	11	RN55-?????	1	00000	XXXXX	SELECTED IN TEST
R	12	RN55-?????	1	00000	XXXXX	SELECTED IN TEST
R	13	RN55-?????	1	00000	XXXXX	SELECTED IN TEST
R	14	RN55-?????	1	00000	XXXXX	SELECTED IN TEST
VR	1	DRAE-00827	1	04713	1N827	IN827 6.2V REF. DIODE

Parts List for AM MODULATOR ASSY No. 101BA23300 Rev. D

Item		Part Number	Qty	FSCM	Mfr's Part Number	Description
	1	101BF23300	1	58900	101BF23300	AM MODULATOR BD
	2	HSCS-403X4	2	88245	A-1571B-3/16-16	#4 X 3/16 SWG CLR SPACER
	3	ETSB-06216	6	88245	2000B	BIFURCATED TERMINAL 5/32
C	1	CC50-05100	1	56289	3CZ5U105X0050C5	1 UF CERAMIC Z5U
C	3	CC50-05100	1	56289	3CZ5U105X0050C5	1 UF CERAMIC Z5U
C	4	CC50-01100	1	51642	150-100-COG-101J	100 PF CERAMIC NPO
C	5	CC50-05100	1	56289	3CZ5U105X0050C5	1 UF CERAMIC Z5U
C	6	CC50-05100	1	56289	3CZ5U105X0050C5	1 UF CERAMIC Z5U
C	7	CC50-05100	1	56289	3CZ5U105X0050C5	1 UF CERAMIC Z5U
C	8	CC50-03680	1	51642	150-100-W5R-683	.068 UF CERAMIC X7R
C	9	CC50-05100	1	56289	3CZ5U105X0050C5	1 UF CERAMIC Z5U
C	10	CC50-05100	1	56289	3CZ5U105X0050C5	1 UF CERAMIC Z5U
C	11	CC50-05100	1	56289	3CZ5U105X0050C5	1 UF CERAMIC Z5U
C	12	CC50-05100	1	56289	3CZ5U105X0050C5	1 UF CERAMIC Z5U
IC	1	UON0-00074	1	01295	TL074CN	TL074CN QUAD FET OP AMP
IC	2	UAN0-00441	1	01295	TL441CN	TL441 DUAL LOG AMP
IC	3	UON0-00074	1	01295	TL074CN	TL074CN QUAD FET OP AMP
IC	4	UON0-00072	1	01295	TL072CP	TL072CP DUAL FET OP AMP
J	1	JRBM-00101	1	98291	51-053-0000	SMB M RTANG PC MOUNT
J	2	JRBM-00101	1	98291	51-053-0000	SMB M RTANG PC MOUNT
J	3	JRBM-00101	1	98291	51-053-0000	SMB M RTANG PC MOUNT
J	4	JRBM-00101	1	98291	51-053-0000	SMB M RTANG PC MOUNT
R	1	RAPD-22000	1	73138	89PR20K	20K POT 15T PC MNT
R	2	RAPD-11000	1	73138	89PR1K	1K POT 15T PC MNT
R	3	RN55-31000	1	05905	SMA 0207 E 96	100 K OHMS 1% MET FILM
R	4	RN55-11000	1	05905	SMA 0207 E 96	1 K OHMS 1% MET FILM
R	5	RN55-32000	1	05905	SMA 0207 E 96	200 K OHMS 1% MET FILM
R	6	RN55-14750	1	05905	SMA 0207 E 96	4.75 K OHMS 1% MET FILM
R	7	RN55-21000	1	05905	SMA 0207 E 96	10 K OHMS 1% MET FILM
R	8	RN55-21400	1	05905	SMA 0207 E 96	14 K OHMS 1% MET FILM
R	9	RN55-11000	1	05905	SMA 0207 E 96	1 K OHMS 1% MET FILM
R	10	RN55-11000	1	05905	SMA 0207 E 96	1 K OHMS 1% MET FILM
R	11	RN55-31000	1	05905	SMA 0207 E 96	100 K OHMS 1% MET FILM
R	12	RN55-41000	1	05905	SMA 0207 E 96	1 M OHMS 1% MET FILM
R	13	RN55-21400	1	05905	SMA 0207 E 96	14 K OHMS 1% MET FILM
R	14	RN55-22210	1	05905	SMA 0207 E 96	22.1 K OHMS 1% MET FILM
R	15	RN55-14750	1	05905	SMA 0207 E 96	4.75 K OHMS 1% MET FILM
R	16	RN55-22210	1	05905	SMA 0207 E 96	22.1 K OHMS 1% MET FILM
R	17	RN55-14750	1	05905	SMA 0207 E 96	4.75 K OHMS 1% MET FILM
R	18	RN55-21000	1	05905	SMA 0207 E 96	10 K OHMS 1% MET FILM
R	19	RN55-21000	1	05905	SMA 0207 E 96	10 K OHMS 1% MET FILM
R	20	RN55-21000	1	05905	SMA 0207 E 96	10 K OHMS 1% MET FILM
R	21	RN55-21000	1	05905	SMA 0207 E 96	10 K OHMS 1% MET FILM
R	22	RN55-23920	1	05905	SMA 0207 E 96	39.2 K OHMS 1% MET FILM
R	23	RN55-14750	1	05905	SMA 0207 E 96	4.75 K OHMS 1% MET FILM
R	24	RN55-31000	1	05905	SMA 0207 E 96	100 K OHMS 1% MET FILM
R	25	RN55-31240	1	05905	SMA 0207 E 96	124 K OHMS 1% MET FILM
R	26	RAPD-11000	1	73138	89PR1K	1K POT 15T PC MNT
R	27	RN55-?????	1	00000	XXXXX	SELECTED IN TEST

SECTION SEVEN

DIAGRAMS

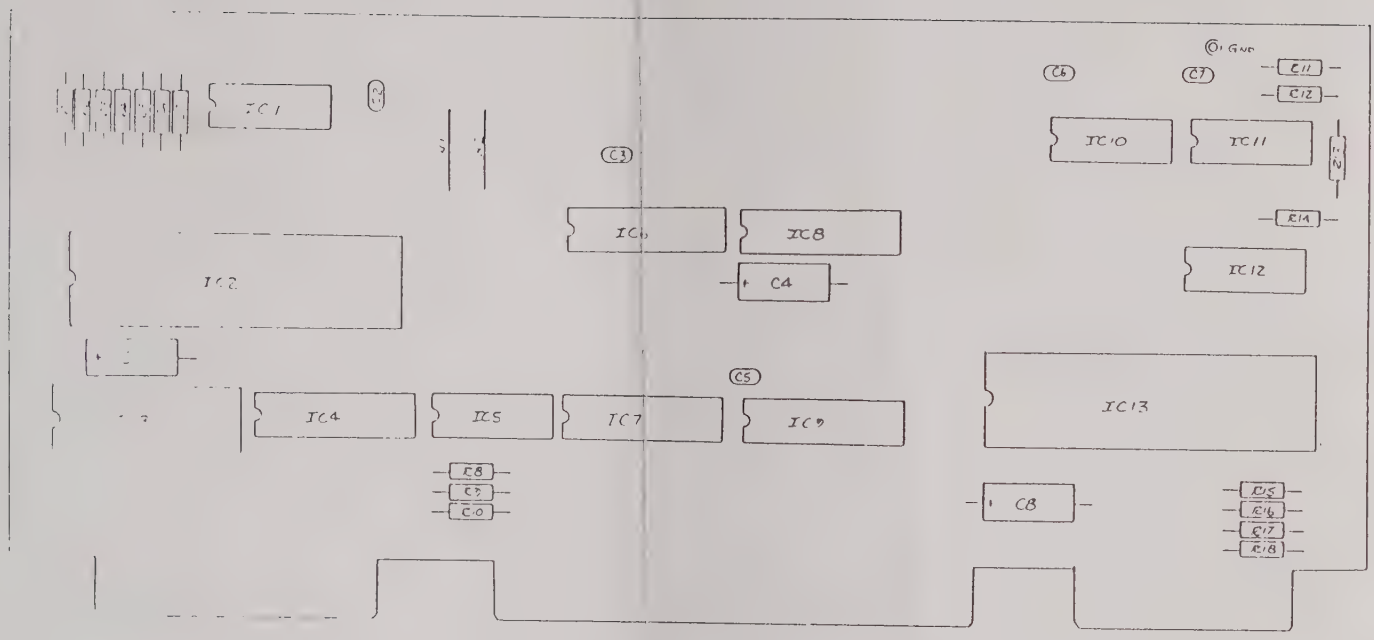

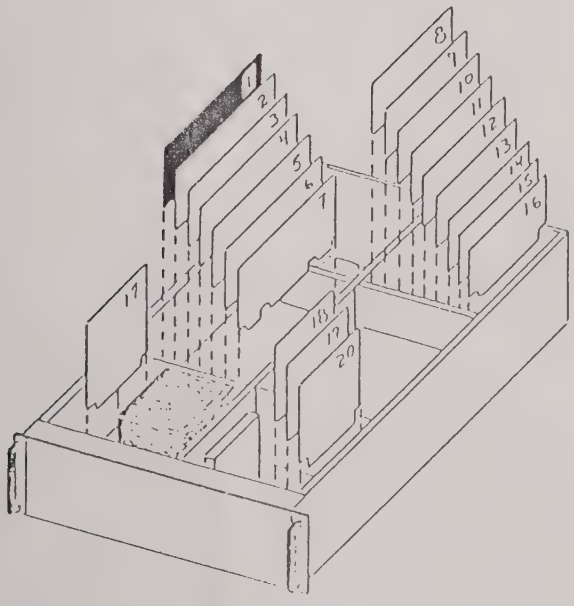

FIG: 7.A1.1
IEEE-488/MICROWAVE PIA PC ASSY (A1)
DWG# 101BM06700 SHT 1

REV B

COMPUTER IEEE PIA - Circuit Board A1

General

Part of the microprocessor interface system, this card has two major functions. It provides the IEEE-488 interface and, via a peripheral interface adapter, controls the various D/A converters in the unit.

Computer Bus Interface

A generalized buffer/decoder circuit is employed to connect the two functional circuits to the computer bus. IC6 provides a bi-directional buffer for the data lines. IC5, IC7 & IC9 buffer the remaining lines, as required. Bipolar prom IC8 provides enable signals at the proper address for the data buffers, IC2 and IC13. Various other control signals are provided by IC10 and IC11.

IEEE-488 Interface

The IEE-488 interface is implemented by IC2, under control of the microprocessor. This single integrated circuit develops the required protocol and data translation, thus freeing the processor from a considerable amount of work. Buffers IC3 and IC4 connect to the rear panel IEEE interface connector. The only function not implemented in the IEEE interface IC is that of device address. This is handled directly by the processor, via buffer IC1.

Peripheral Interface Adapter

P.I.A. IC13 is used to provide control of the various D/A converters in the unit. It also controls the enable signal for the microwave oscillator drivers and selects their speed. The "$\overline{CS}$" (chip select) lines for the various D/A converters are supplied via a 3-line to 8-line decoder, IC12. All the remaining D/A control lines are all driven in parallel directly by the P.I.A.

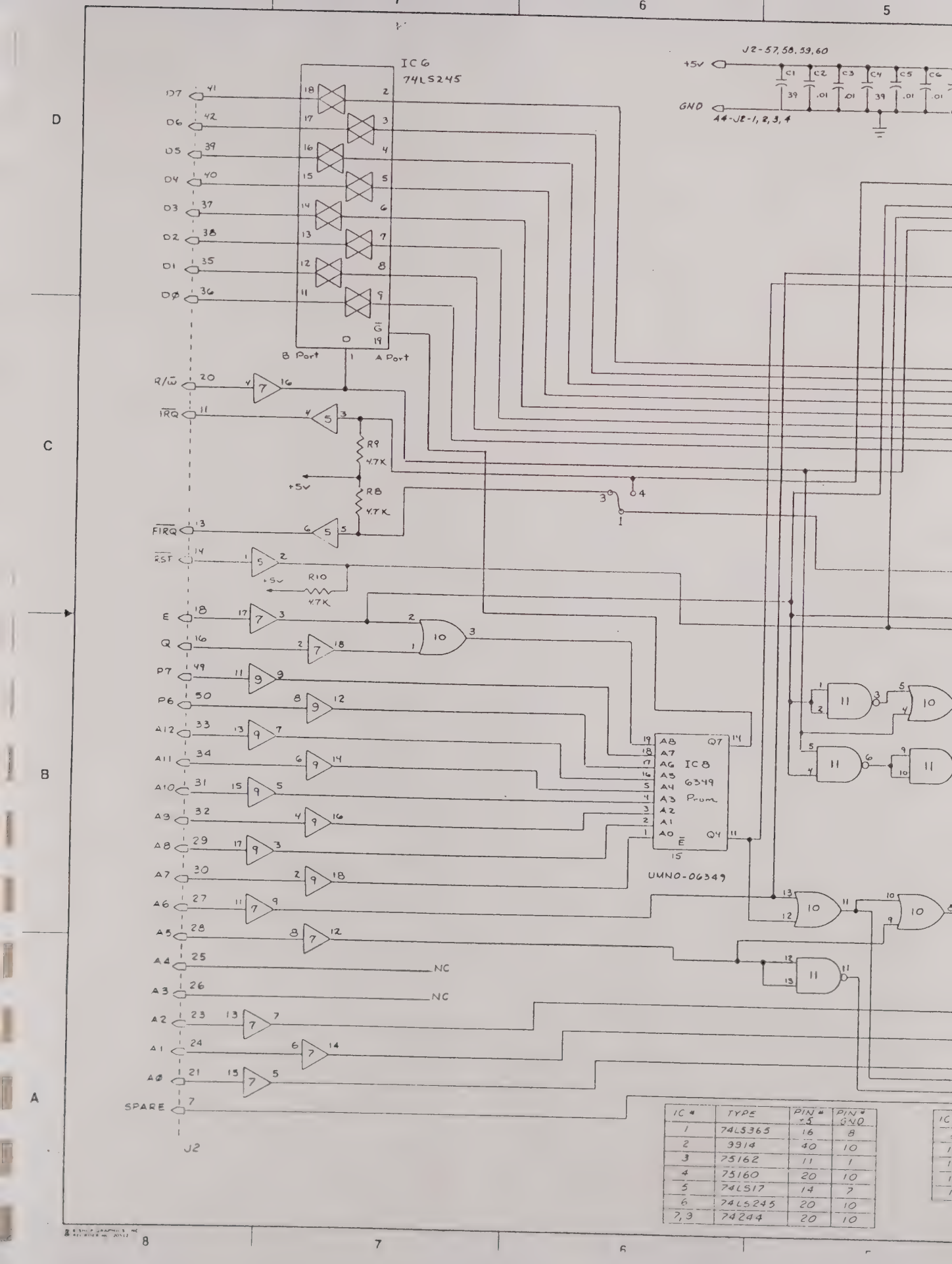

IC #	TYPE	PIN # +5	PIN # GND
1	74LS365	16	8
2	9314	40	10
3	75162	11	1
4	75160	20	10
5	74LS17	14	7
6	74LS245	20	10
7,9	74244	20	10

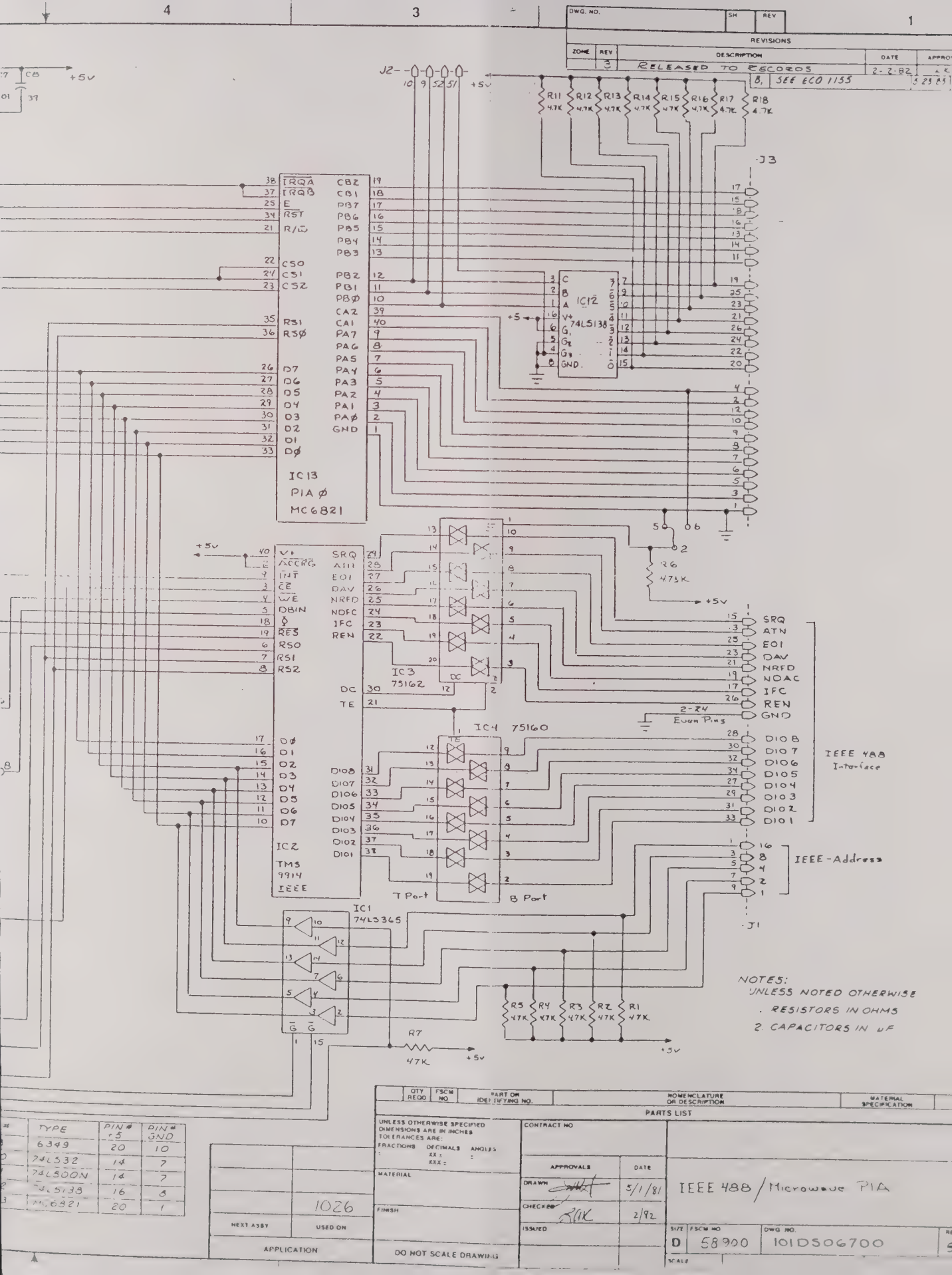
4
3
1
DWG. NO.
SH
REV
REVISIONS
ZONE
REV
DESCRIPTION
DATE
APPRO
3
RELEASED TO RECORDS
2-2-82
8, SEE ECO 1153
5 29 85
+5V
J2
10 9 52 51 +5V
R11 4.7K
R12 4.7K
R13 4.7K
R14 4.7K
R15 4.7K
R16 4.7K
R17 4.7K
R18 4.7K
J3
IC12
74LS138
C
B
A
V+
G1
G2
G3
GND
IC13
PIA Ø
MC6821
IRQA
IRQB
E
RST
R/W
CS0
CS1
CS2
RS1
RSØ
D7
D6
D5
D4
D3
D2
D1
DØ
CB2
CB1
PB7
PB6
PB5
PB4
PB3
PB2
PB1
PBØ
CA2
CA1
PA7
PA6
PA5
PA4
PA3
PA2
PA1
PAØ
GND
R6 4.7K
IC3 75162
IC4 75160
IC2 TMS 9914 IEEE
IC1 74LS365
SRQ
ATN
EOI
DAV
NRFD
NDAC
IFC
REN
GND
2-24 Even Pins
DIO8
DIO7
DIO6
DIO5
DIO4
DIO3
DIO2
DIO1
IEEE 488 Interface
IEEE-Address
T Port
B Port
J1
R5 4.7K
R4 4.7K
R3 4.7K
R2 4.7K
R1 4.7K
R7 4.7K
+5V
NOTES:
UNLESS NOTED OTHERWISE
. RESISTORS IN OHMS
2. CAPACITORS IN uF
QTY REQD
FSCM NO
PART OR IDENTIFYING NO.
NOMENCLATURE OR DESCRIPTION
MATERIAL SPECIFICATION
PARTS LIST
TYPE
PIN # +5
PIN # GND
6349 20 10
74LS32 14 7
74LS00N 14 7
74LS138 16 8
MC6821 20 1
UNLESS OTHERWISE SPECIFIED DIMENSIONS ARE IN INCHES
TOLERANCES ARE:
FRACTIONS
DECIMALS
ANGLES
CONTRACT NO
APPROVALS
DATE
DRAWN
5/1/81
CHECKED
2/82
ISSUED
MATERIAL
FINISH
DO NOT SCALE DRAWING
NEXT ASSY
USED ON
1026
APPLICATION
IEEE 488 / Microwave PIA
SIZE
FSCM NO
DWG NO.
D
58900
101D506700
SCALE

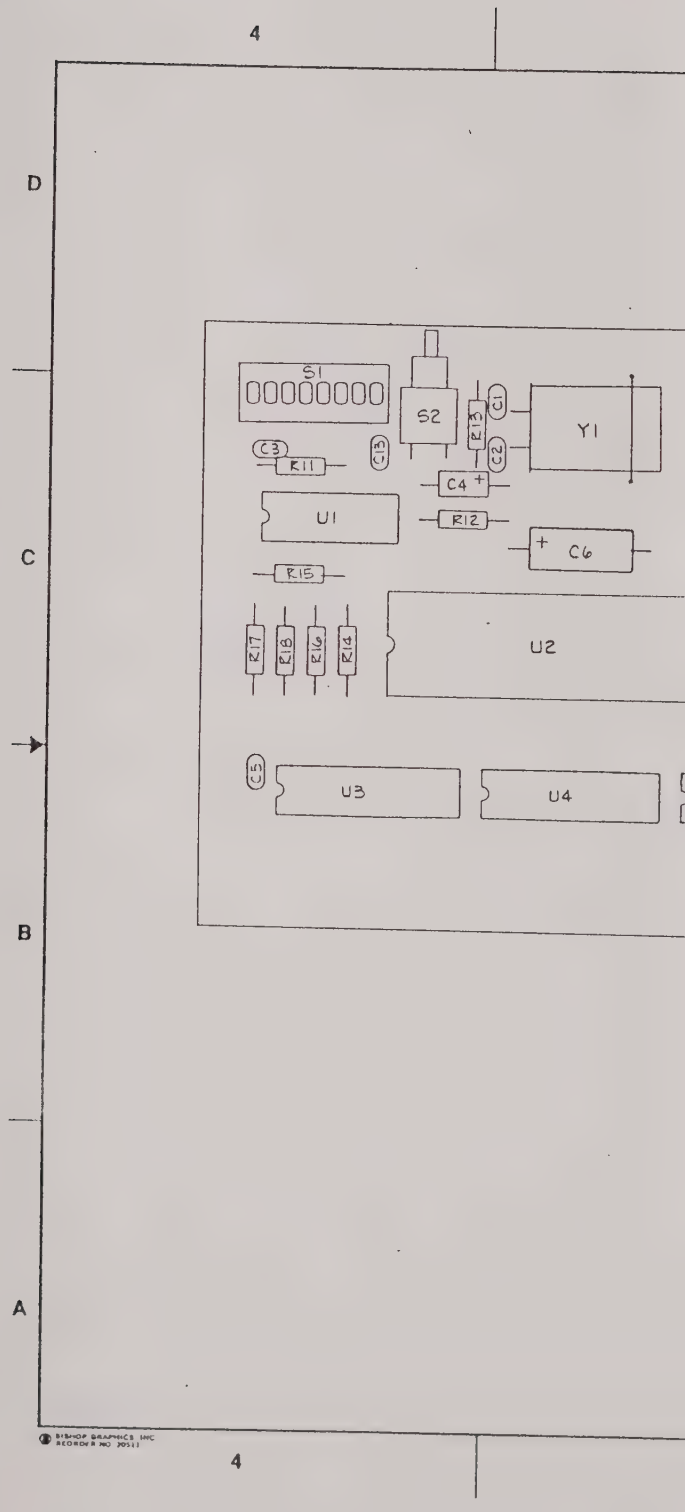
4
D
C
B
A
S1
S2
C1
C2
C3
C13
R13
Y1
R11
C4
U1
R12
C6
R15
R17
R18
R16
R14
U2
C5
U3
U4
4

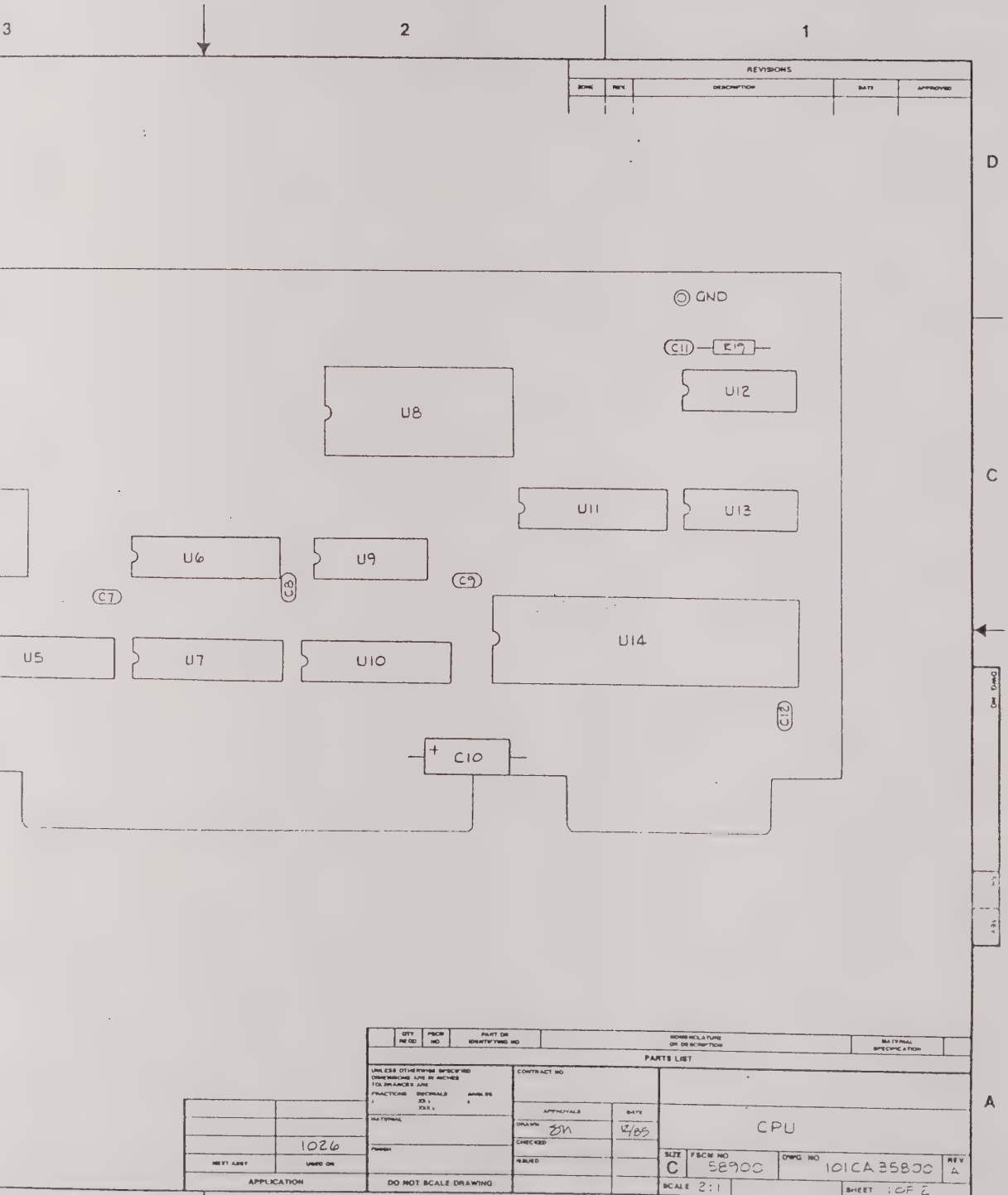
3
2
1
REVISIONS
ZONE
REV
DESCRIPTION
DATE
APPROVED
D
C
A
GND
C11
R19
U12
U8
U11
U13
U6
U9
C8
C9
C7
U14
U5
U7
U10
C12
C10
PARTS LIST
CONTRACT NO
APPROVALS
DATE
DRAWN
ESM
12/85
CHECKED
ISSUED
CPU
SIZE
C
FSCM NO
58900
DWG NO
101CA35800
REV
A
SCALE 2:1
SHEET 1 OF 2
1026
APPLICATION
DO NOT SCALE DRAWING

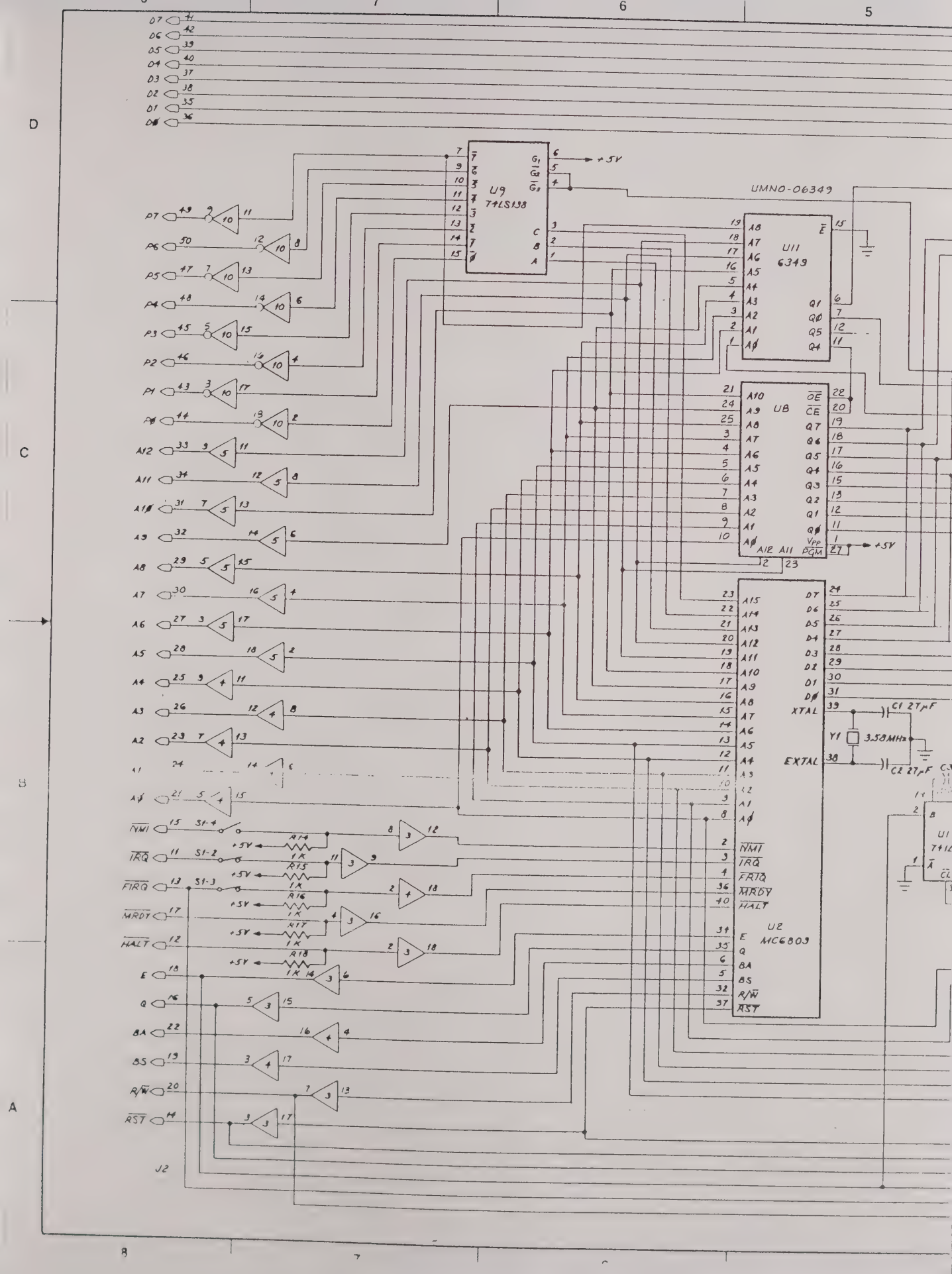
U9
74LS138
UMNO-06349
U11
6349
U8
U2
MC6809
XTAL
EXTAL
Y1
3.58MHz
C1 27pF
C2 27pF
+5V
NMI
IRQ
FIRQ
MRDY
HALT
RST
E
Q
BA
BS
R/W
J2

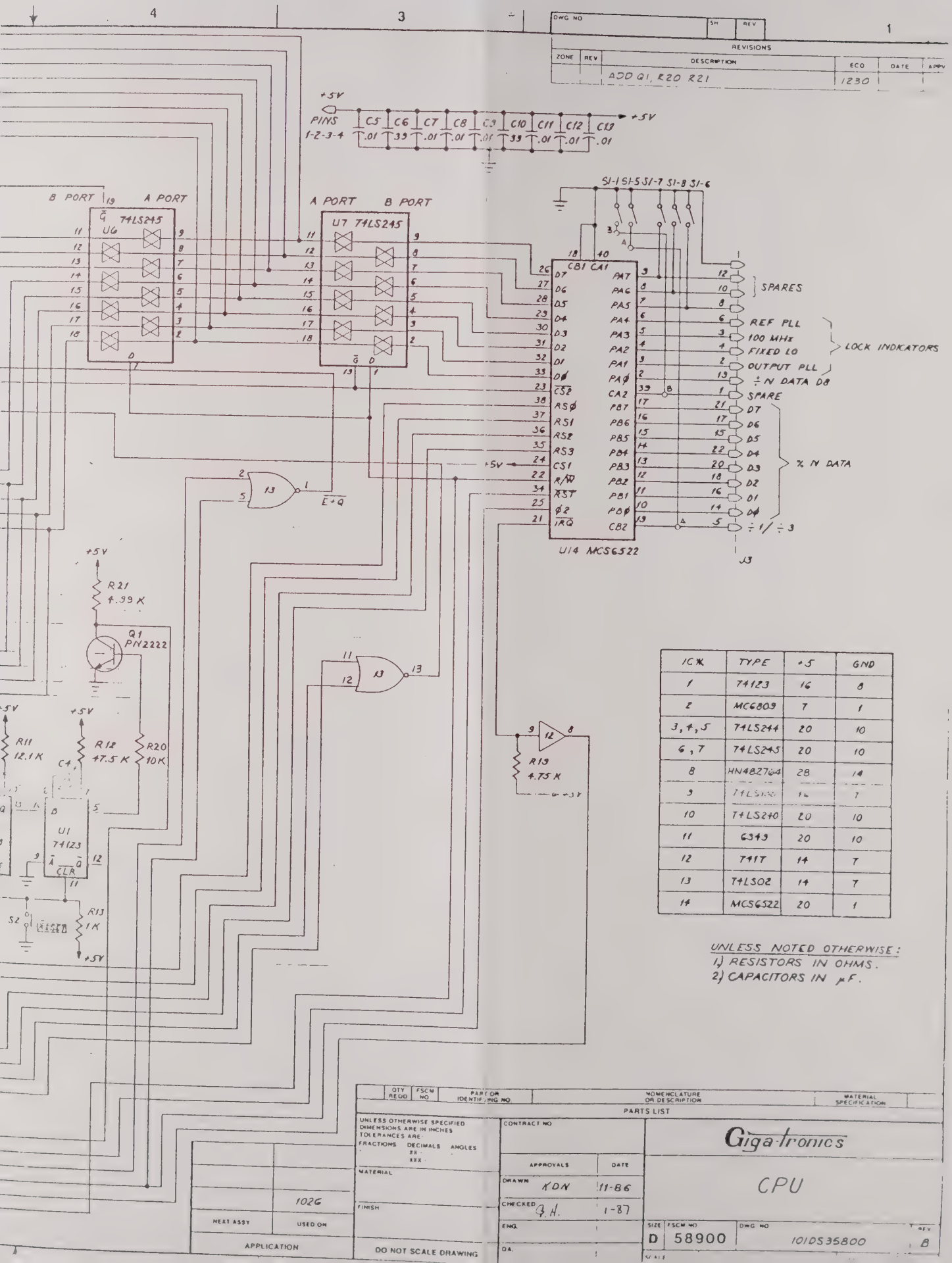

IC #	TYPE	+5	GND
1	74123	16	8
2	MC6809	7	1
3, 4, 5	74LS244	20	10
6, 7	74LS245	20	10
8	HN482764	28	14
9	74LS138	16	7
10	74LS240	20	10
11	6343	20	10
12	7417	14	7
13	74LS02	14	7
14	MCS6522	20	1

UNLESS NOTED OTHERWISE:
1) RESISTORS IN OHMS.
2) CAPACITORS IN μF.

PARTS LIST

QTY REQD	FSCM NO	PART OR IDENTIFYING NO.	NOMENCLATURE OR DESCRIPTION	MATERIAL SPECIFICATION

UNLESS OTHERWISE SPECIFIED DIMENSIONS ARE IN INCHES
TOLERANCES ARE:
FRACTIONS DECIMALS ANGLES
.XX ±
.XXX ±

MATERIAL
FINISH
NEXT ASSY 1026
USED ON
APPLICATION
DO NOT SCALE DRAWING

CONTRACT NO

APPROVALS	DATE
DRAWN KDN	11-86
CHECKED G.H.	1-87
ENG.	
QA.	

Giga-tronics

CPU

SIZE D | FSCM NO 58900 | DWG NO 1010S35800 | REV B
SCALE

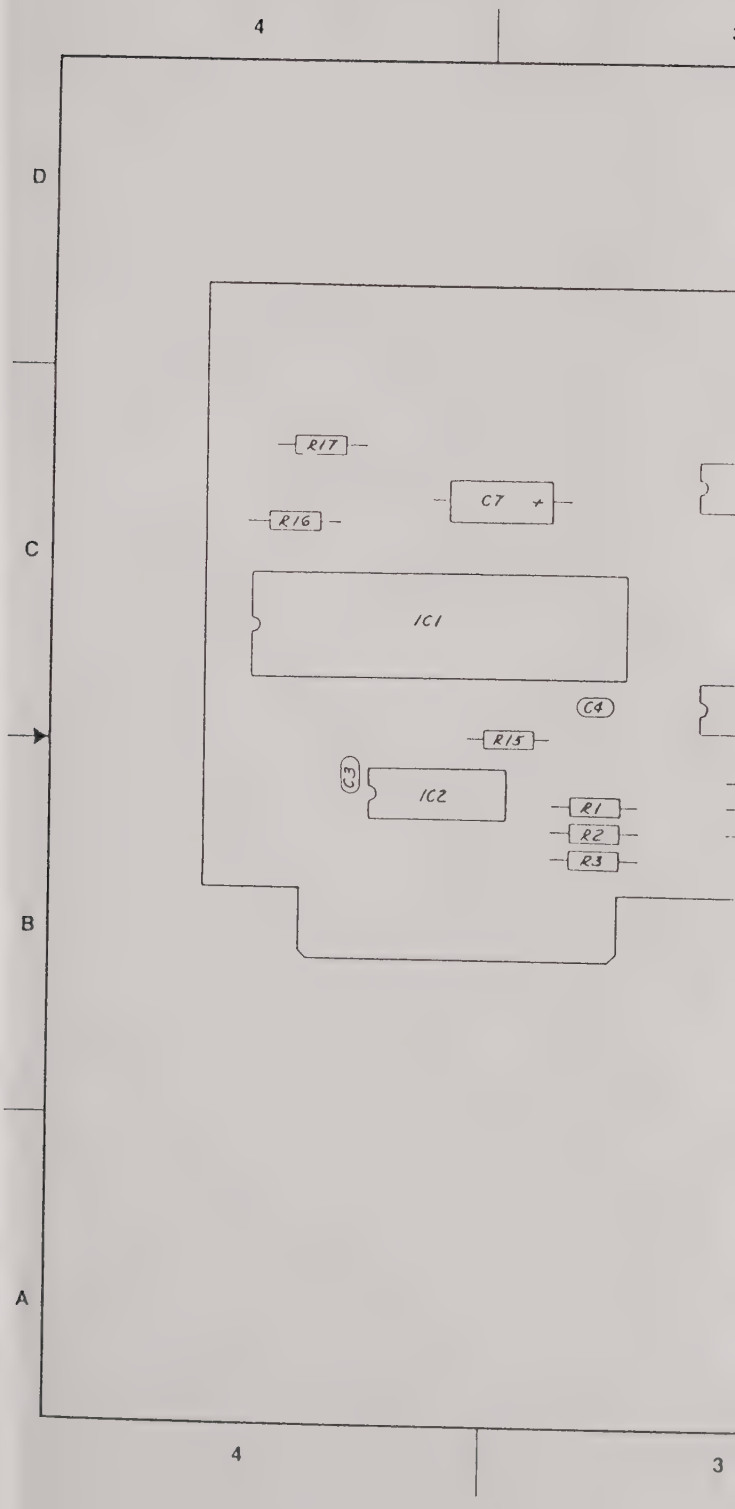
4
D
C
B
A
4
3
R17
C7
R16
IC1
C4
R15
C3
IC2
R1
R2
R3

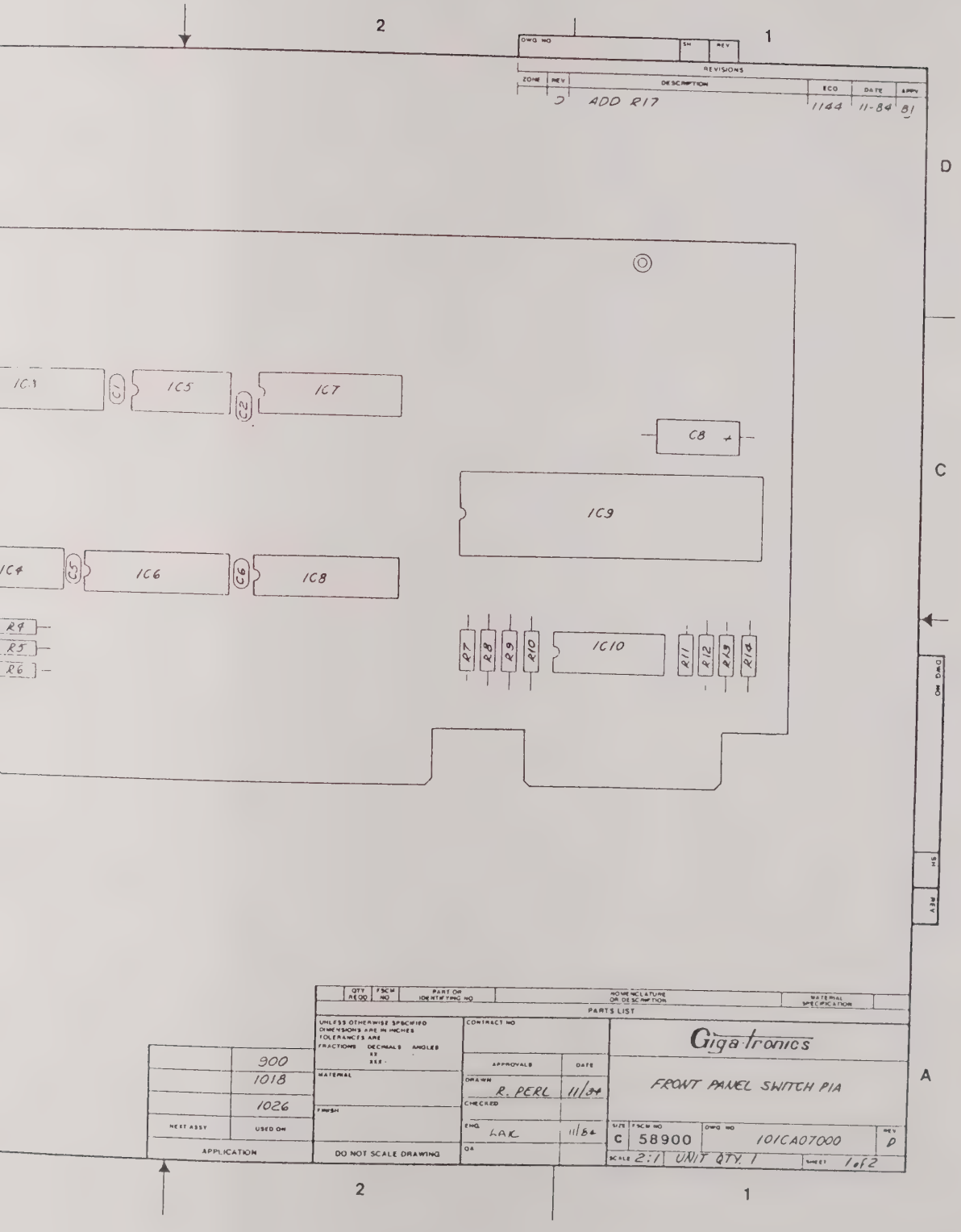

OWG NO	SH	REV

REVISIONS

ZONE	REV	DESCRIPTION	ECO	DATE	APPV
	D	ADD R17	1144	11-84	BJ

PARTS LIST

QTY REQD	FSCM NO	PART OR IDENTIFYING NO	NOMENCLATURE OR DESCRIPTION	MATERIAL SPECIFICATION

	300
	1018
	1026
NEXT ASSY	USED ON
APPLICATION	

UNLESS OTHERWISE SPECIFIED DIMENSIONS ARE IN INCHES
TOLERANCES ARE
FRACTIONS DECIMALS ANGLES
XX
.XXX

MATERIAL

FINISH

DO NOT SCALE DRAWING

CONTRACT NO

APPROVALS	DATE
DRAWN R. PERL	11/84
CHECKED	
ENG LAK	11/84
QA	

Giga-tronics

FRONT PANEL SWITCH PIA

SIZE	FSCM NO	DWG NO	REV
C	58900	101CA07000	D

SCALE 2:1 UNIT QTY. 1 SHEET 1 of 2

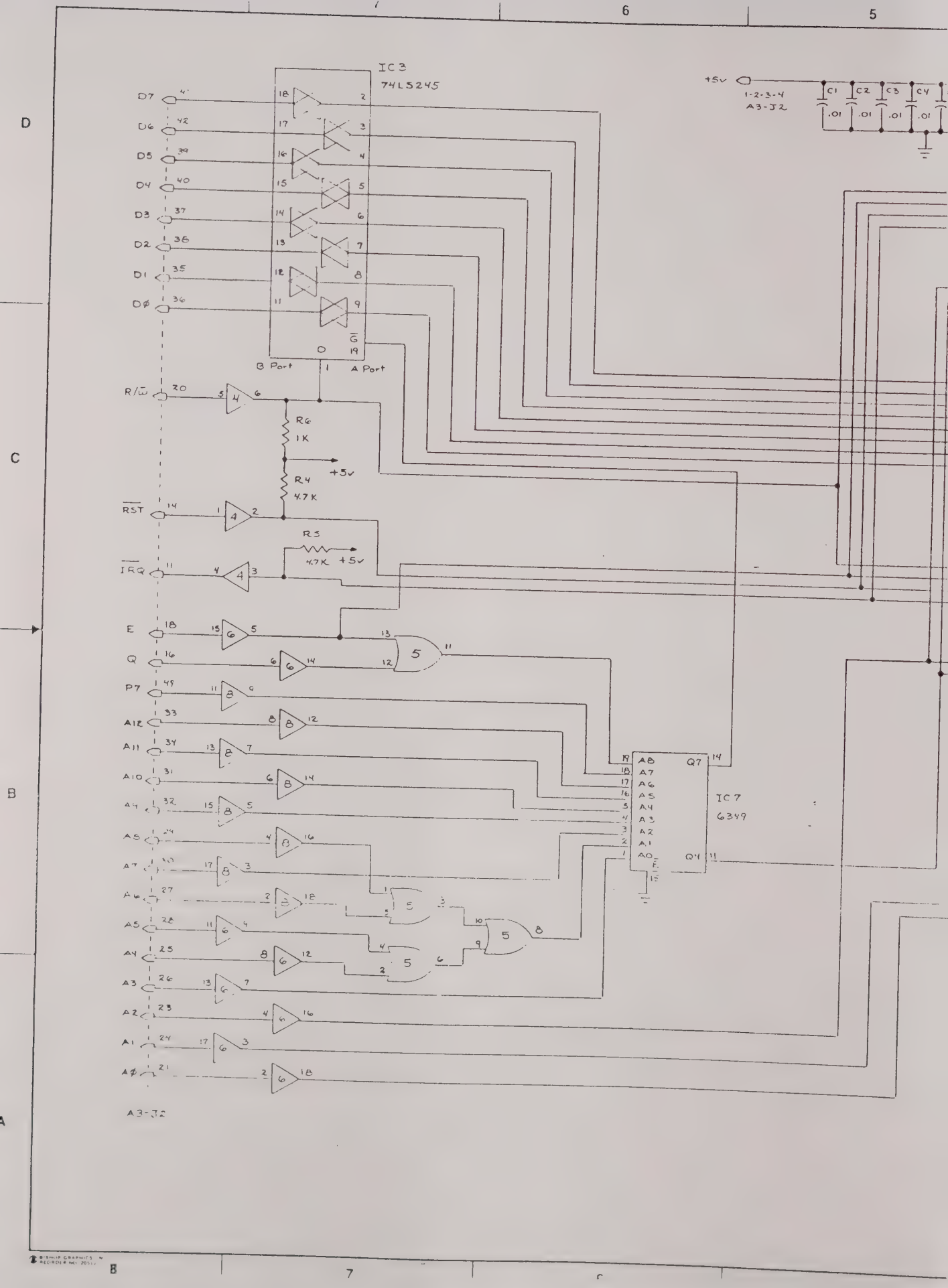
IC3
74LS245
B Port
A Port
+5v
1-2-3-4
A3-J2
C1 .01
C2 .01
C3 .01
C4 .01
D7
D6
D5
D4
D3
D2
D1
DØ
R/W
RST
IRQ
E
Q
P7
A12
A11
A10
A9
A8
A7
A6
A5
A4
A3
A2
A1
AØ
R6 1K
R4 4.7K
R5 4.7K
IC7
6349
A3-J2

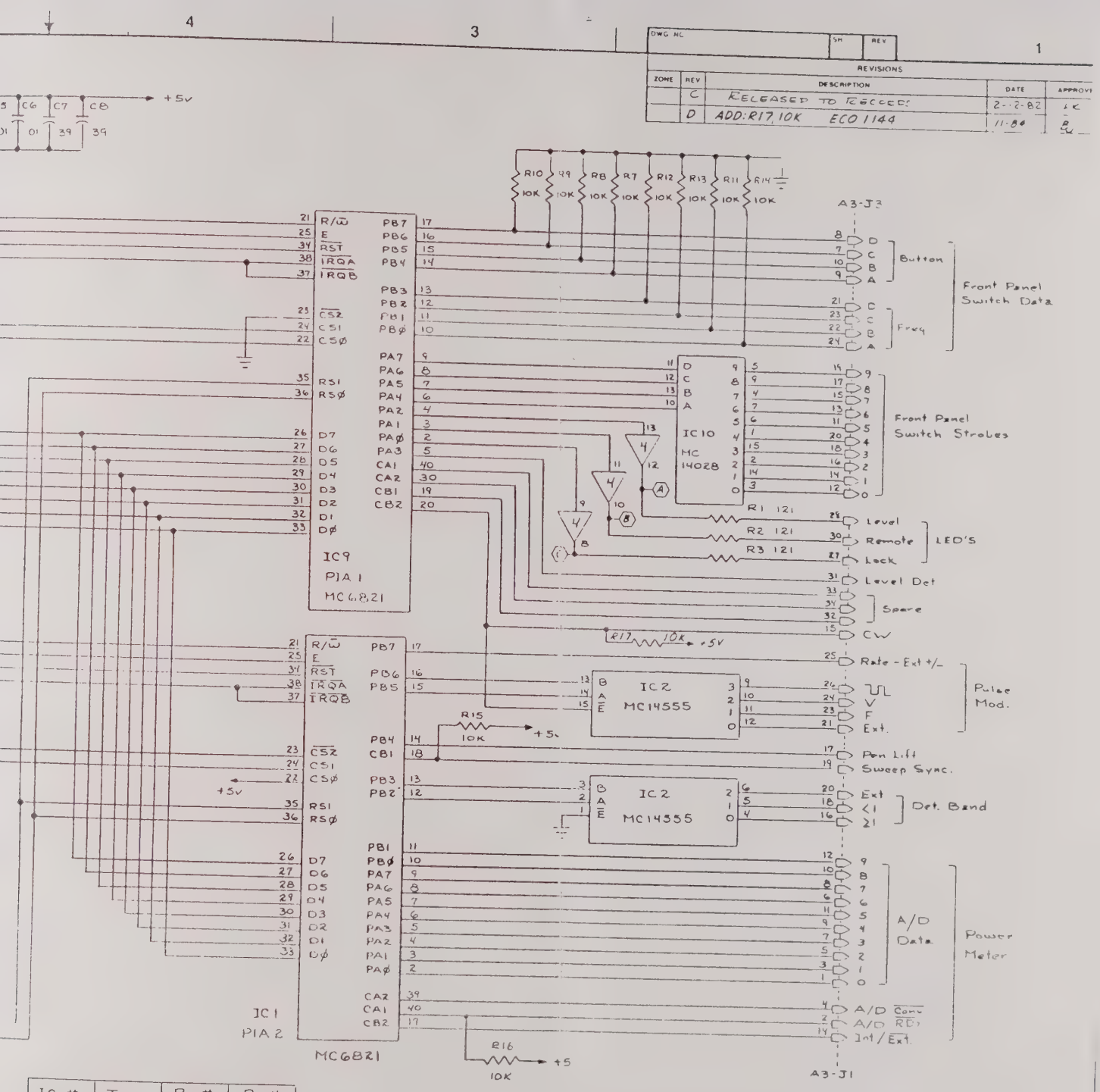

IC #	Type	Pin # +5v	Pin # Gnd
1,9	MC6821	20	1
2	MC14555	16	8
3	74LS245	20	10
4	7417	14	7
5	74LS32	14	7
7	6349	20	10
6,8	74LS244	20	10
10	MC14028	16	8

NOTES:

UNLESS NOTED OTHERWISE:
1. RESISTORS IN OHMS
2. CAPACITORS IN μF

FROM IC4
- (A) J2-9 LEVEL
- (B) J1-22 LOCAL
- (C) J2-6 LOCK

PARTS LIST

QTY REQD	FSCM NO	PART OR IDENTIFYING NO	NOMENCLATURE OR DESCRIPTION	MATERIAL SPECIFICATION

UNLESS OTHERWISE SPECIFIED DIMENSIONS ARE IN INCHES
TOLERANCES ARE
FRACTIONS DECIMALS ANGLES
.XX ±
.XXX ±

CONTRACT NO

APPROVALS	DATE
DRAWN	4/29/81
CHECKED	2/12/82
ISSUED	

MATERIAL
FINISH
DO NOT SCALE DRAWING

Front Panel PIA

NEXT ASSY	USED ON
	1026
APPLICATION	

SIZE	FSCM NO	DWG NO	REV
D	58900	101D507000	

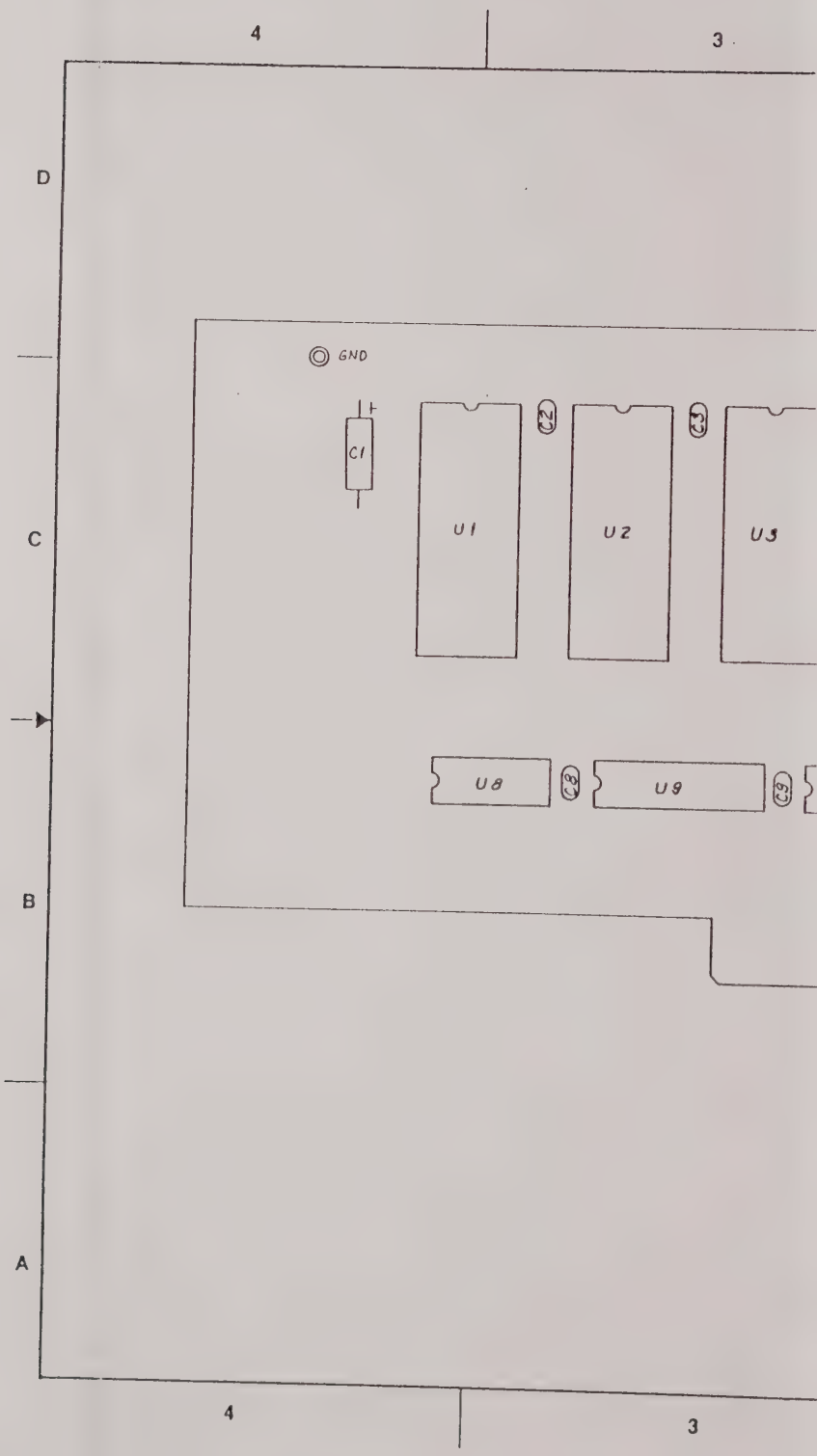
4
3
D
C
B
A
GND
C1
U1
U2
U3
U8
U9
4
3

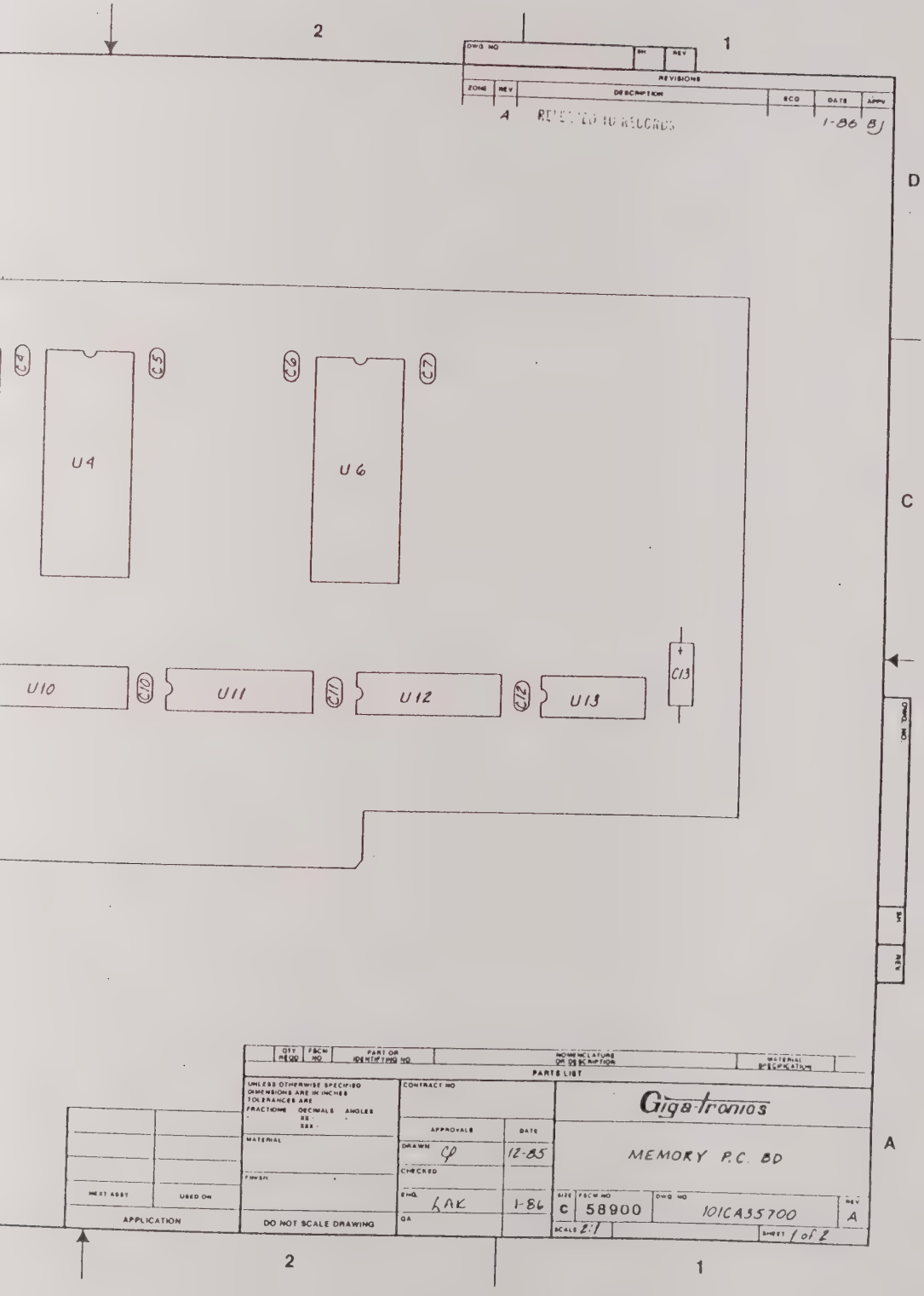
2
1
DWG NO
SH
REV
REVISIONS
ZONE
REV
DESCRIPTION
ECO
DATE
APPV
A
RELEASED TO RECORDS
1-86
BJ
D
C
B
A
U4
U6
U10
U11
U12
U13
C3
C6
C7
C10
C11
C12
C13
+
DWG NO
SH
REV
QTY REQD
FSCM NO
PART OR IDENTIFYING NO
NOMENCLATURE OR DESCRIPTION
MATERIAL DESIGNATION
PARTS LIST
UNLESS OTHERWISE SPECIFIED DIMENSIONS ARE IN INCHES TOLERANCES ARE
FRACTIONS
DECIMALS
ANGLES
.XX ±
.XXX ±
MATERIAL
FINISH
NEXT ASSY
USED ON
APPLICATION
DO NOT SCALE DRAWING
CONTRACT NO
APPROVALS
DATE
DRAWN
CP
12-85
CHECKED
ENG
LAK
1-86
QA
Giga-tronics
MEMORY P.C. BD
SIZE
C
FSCM NO
58900
DWG NO
101CA35700
REV
A
SCALE 2:1
SHEET 1 of 2
2
1

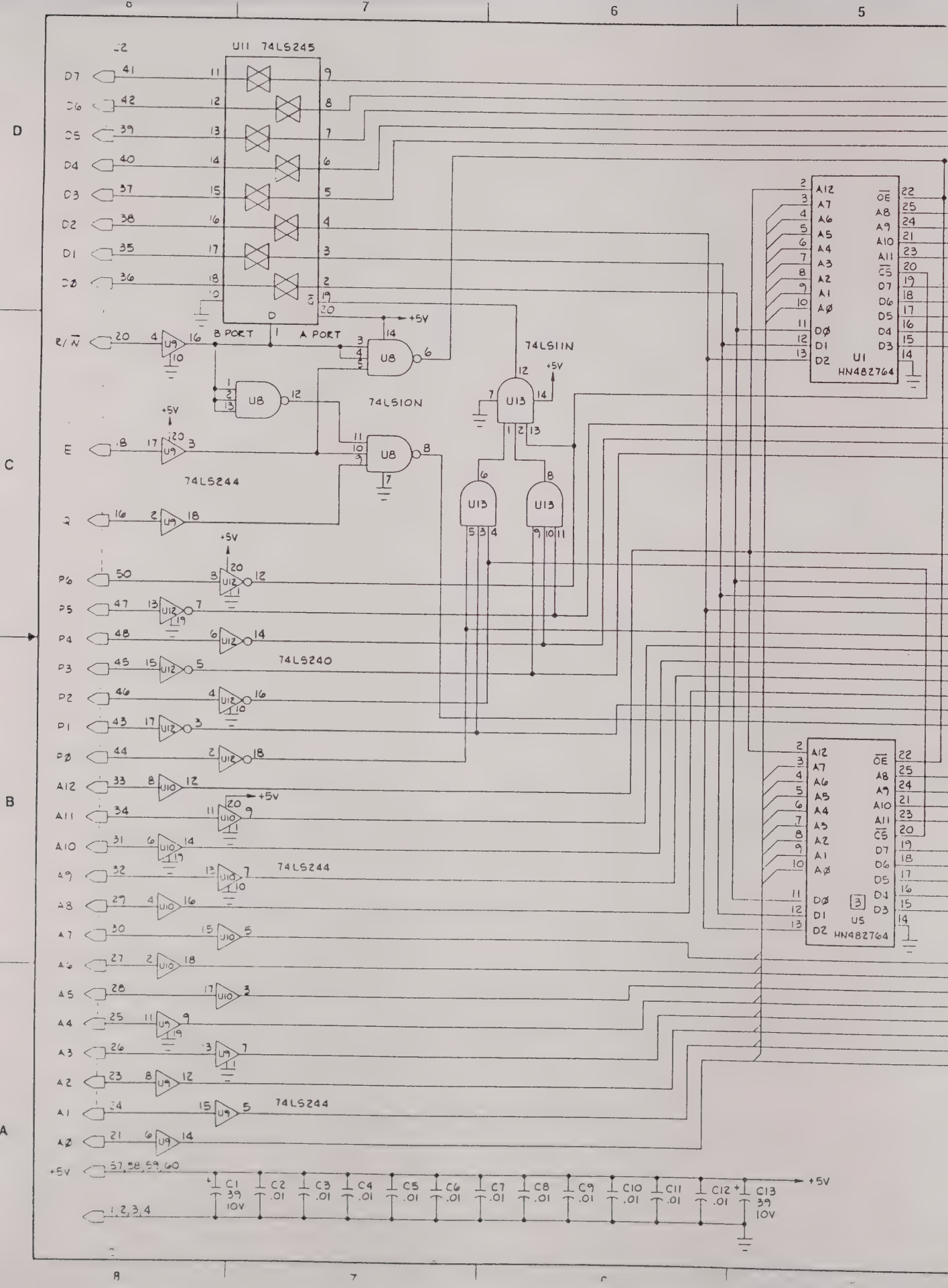
U11 74LS245
D7
D6
D5
D4
D3
D2
D1
D0
D
B PORT
A PORT
R/W
E
74LS244
74LS240
74LS244
74LS244
74LS10N
74LS11N
U1
HN482764
U5
HN482764
A12
A7
A6
A5
A4
A3
A2
A1
A0
D0
D1
D2
OE
A8
A9
A10
A11
CS
D7
D6
D5
D4
D3
+5V
C1 39 10V
C2 .01
C3 .01
C4 .01
C5 .01
C6 .01
C7 .01
C8 .01
C9 .01
C10 .01
C11 .01
C12 .01
C13 39 10V

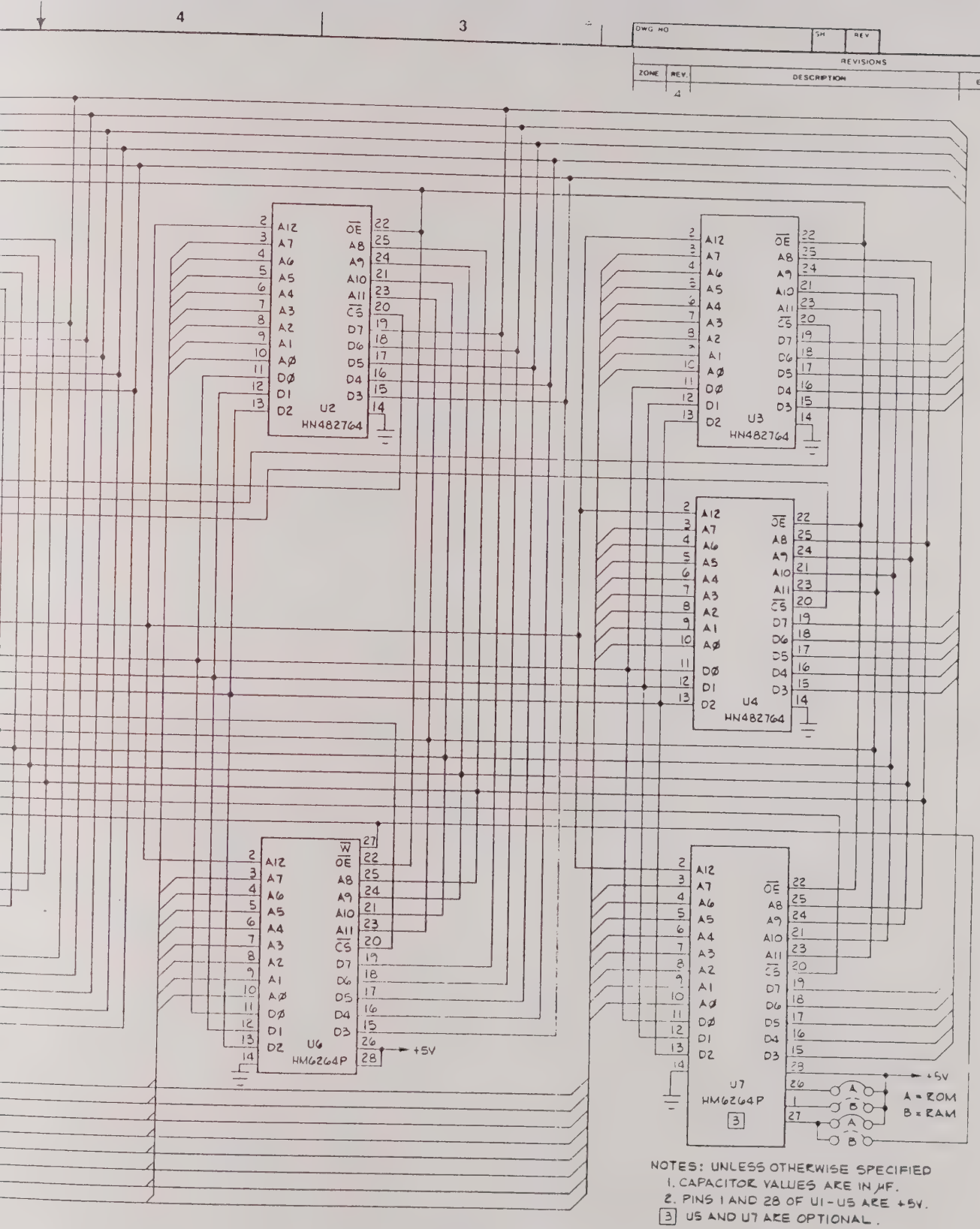

QTY REQD	FSCM NO.	PART OR IDENTIFYING NO	NOMENCLATURE OR DESCRIPTION	MATERIAL SPECIFICATION

PARTS LIST

LAST USED	NOT USED
U13 C13	

NEXT ASSY	USED ON

APPLICATION

UNLESS OTHERWISE SPECIFIED DIMENSIONS ARE IN INCHES
TOLERANCES ARE:
FRACTIONS DECIMALS ANGLES
.XX ±
.XXX ±

MATERIAL

FINISH

DO NOT SCALE DRAWING

CONTRACT NO

APPROVALS	DATE
DRAWN BM	12/85
CHECKED	
ENG. GH	12/86
QA	

Giga-tronics

MEMORY

SIZE	FSCM NO	DWG NO	REV
D	58900	1010535700	A

SCALE

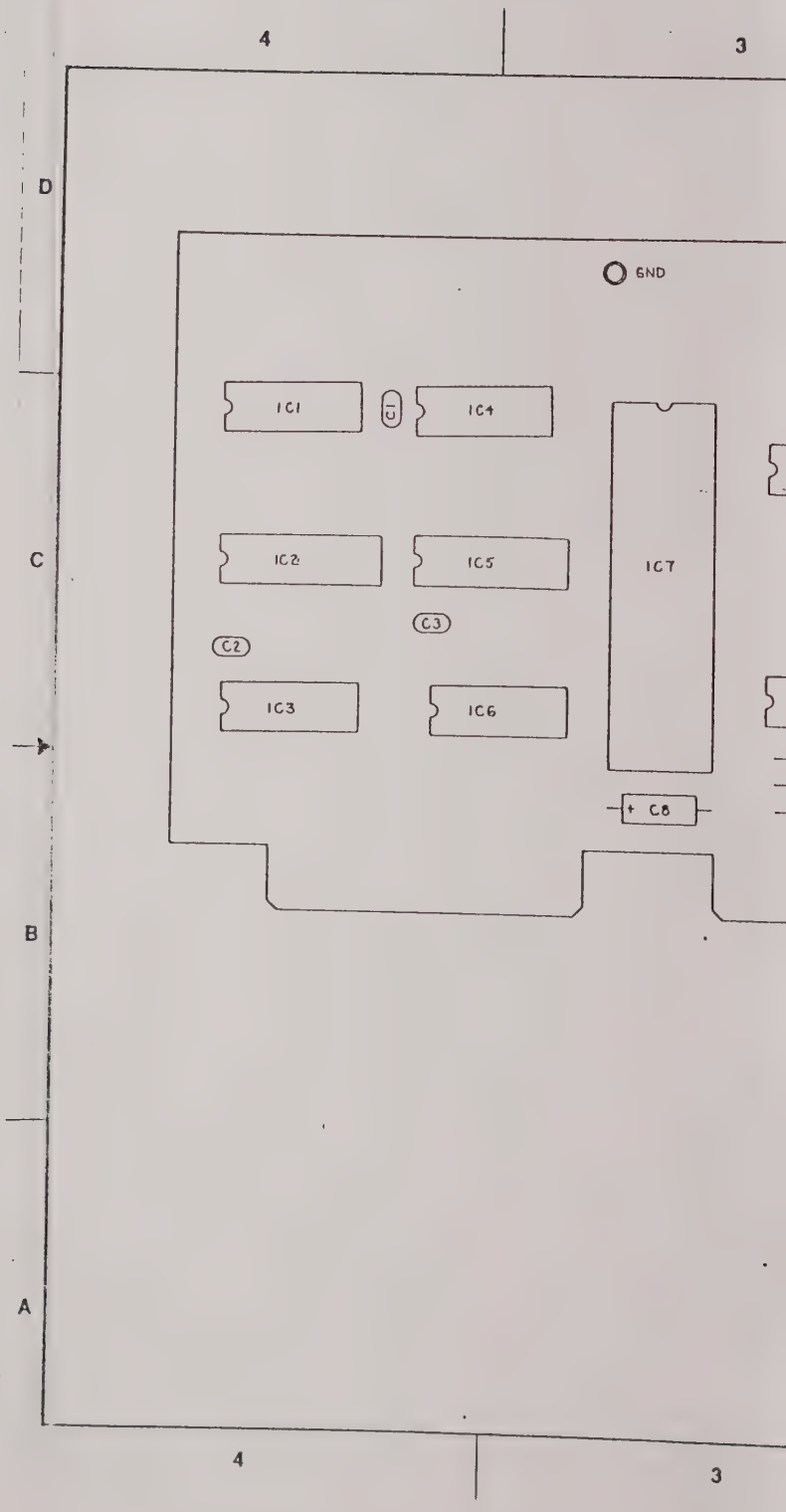
4
3
D
C
B
A
GND
IC1
C1
IC4
IC2
IC5
IC7
C3
C2
IC3
IC6
C8
4
3

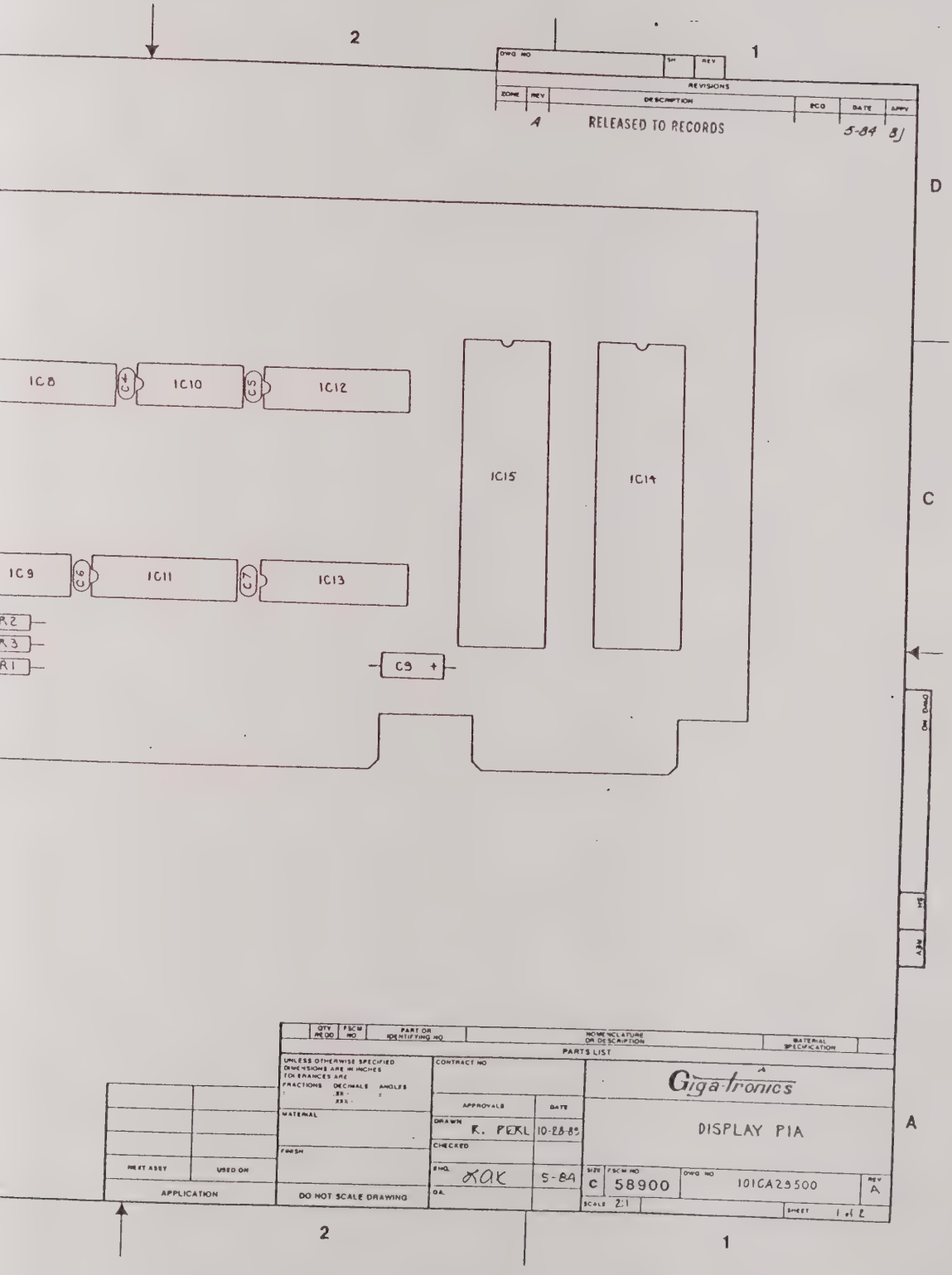

2
1
DWG NO
SH
REV
REVISIONS
ZONE
REV
DESCRIPTION
ECO
DATE
APPV
A
RELEASED TO RECORDS
5-84
BJ
D
C
A
IC8
C4
IC10
C5
IC12
IC15
IC14
IC9
C6
IC11
C7
IC13
R2
R3
R1
C9 +
QTY REQD
FSCM NO
PART OR IDENTIFYING NO
NOMENCLATURE OR DESCRIPTION
MATERIAL SPECIFICATION
PARTS LIST
UNLESS OTHERWISE SPECIFIED DIMENSIONS ARE IN INCHES TOLERANCES ARE
FRACTIONS
DECIMALS
ANGLES
MATERIAL
FINISH
CONTRACT NO
APPROVALS
DATE
DRAWN
R. PERL
10-28-85
CHECKED
ENG.
KAK
5-84
QA.
Giga-tronics
DISPLAY PIA
SIZE
C
FSCM NO
58900
DWG NO
101CA29500
REV
A
SCALE 2:1
SHEET 1 of 2
NEXT ASSY
USED ON
APPLICATION
DO NOT SCALE DRAWING

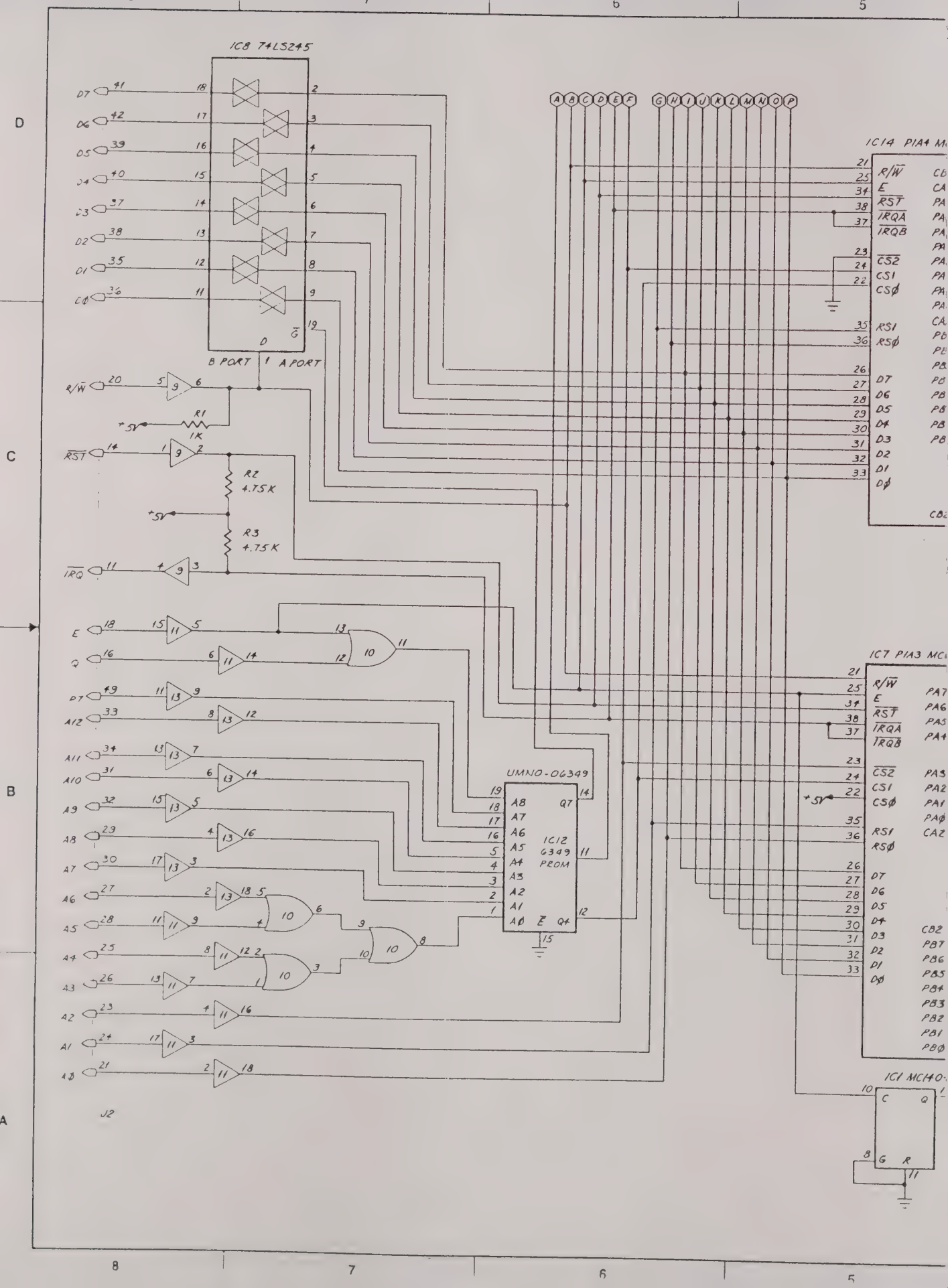

IC8 74LS245
B PORT
A PORT
R1
1K
R2
4.75K
R3
4.75K
+5V
UMNO-06349
IC12
6349
PROM
IC14 PIA4
IC7 PIA3
IC1 MC140
J2

REVISIONS					
ZONE	REV	DESCRIPTION	ECO	DATE	APPV
	A			5-84	

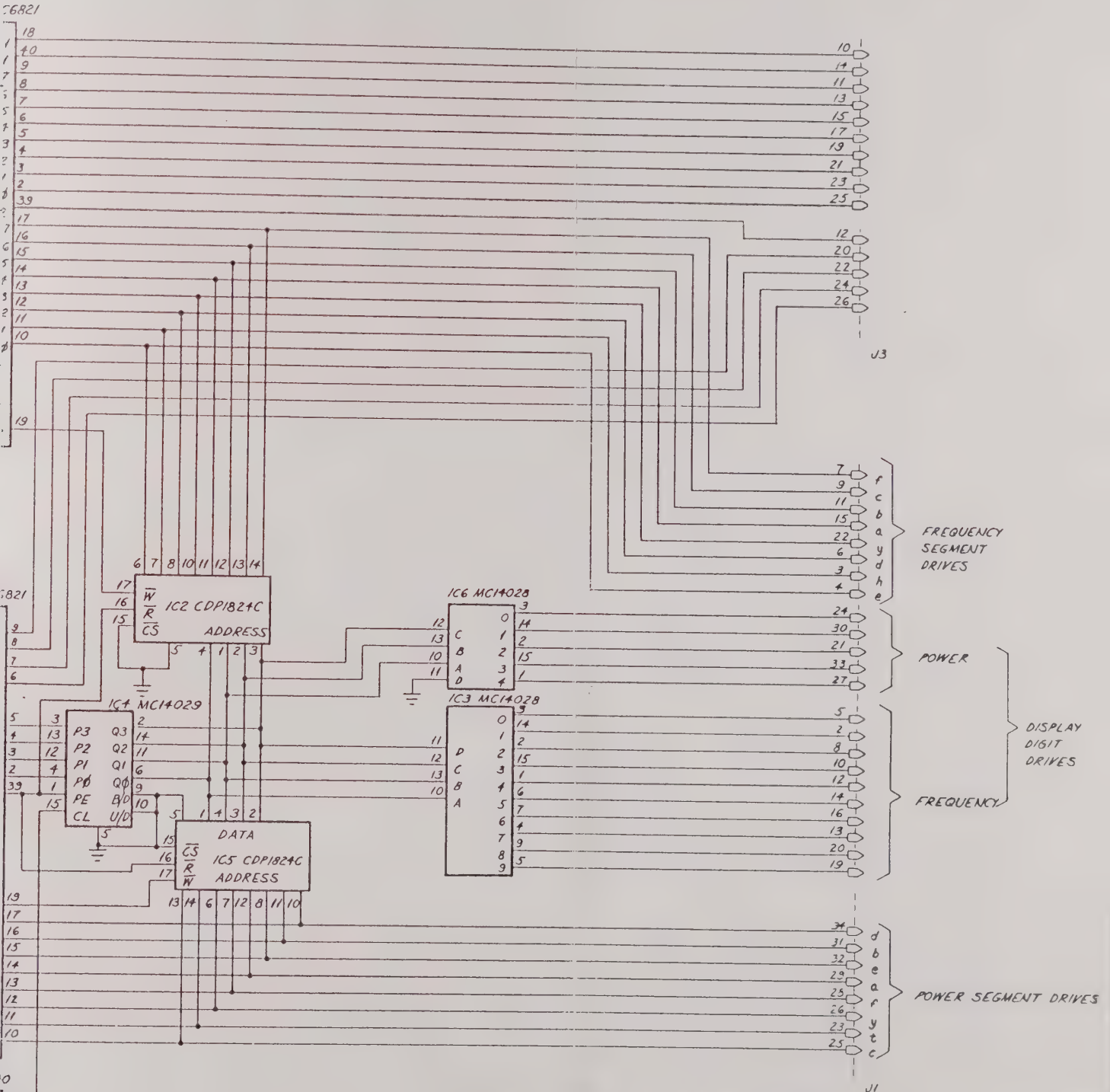

QTY REQD	FSCM NO	PART OR IDENTIFYING NO	NOMENCLATURE OR DESCRIPTION	MATERIAL SPECIFICATION

PARTS LIST

UNLESS OTHERWISE SPECIFIED DIMENSIONS ARE IN INCHES
TOLERANCES ARE
FRACTIONS DECIMALS ANGLES
.XX
.XXX

MATERIAL

FINISH

DO NOT SCALE DRAWING

NEXT ASSY	USED ON

APPLICATION

CONTRACT NO

APPROVALS	DATE
DRAWN R. PERL	10-28-83
CHECKED	
ENG. LAK	9-84
QA	

Giga-tronics

DISPLAY PIA

SIZE	FSCM NO	DWG NO	REV
D	58900	1010529500	A

SCALE ~ SHEET 1 of 2

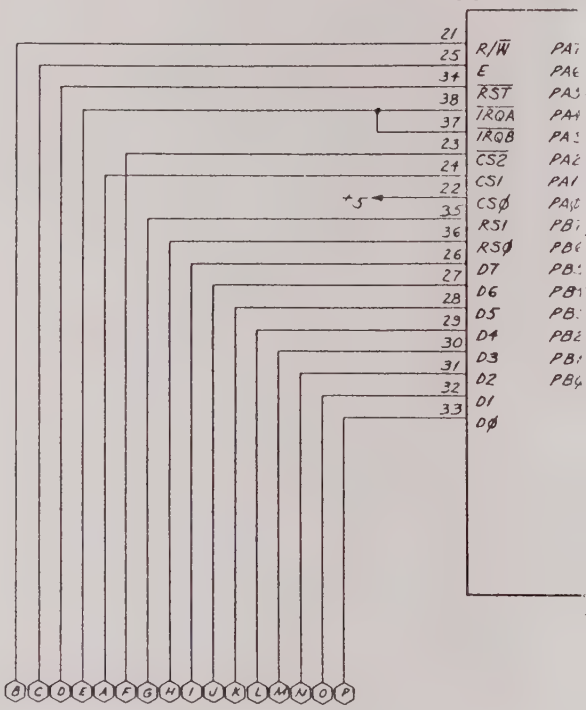

IC#	TYPE	+5	GND
1	MC14040	16	8
2, 5	CDP1824	18	9
3, 6	MC14028	16	8
4	MC14029	16	8
7, 14, 15	6821	20	1
8	74LS245	20	10
9	7417	14	7
10	74LS32	14	7
11, 13	74LS244	20	1, 10, 13
12	6349	20	10

+5V
1-2-
AS-

DWG NO	SH	REV

REVISIONS

ZONE	REV	DESCRIPTION	ECO	DATE	APPV

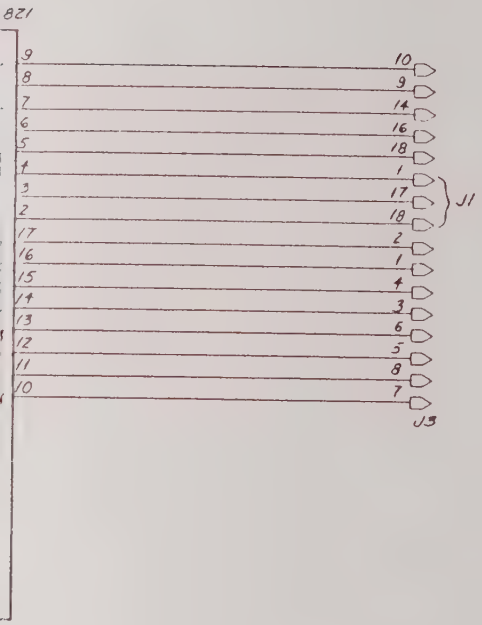

NOTES:
UNLESS NOTED OTHERWISE:
1. RESISTORS IN OHMS
2. CAPACITORS IN μF

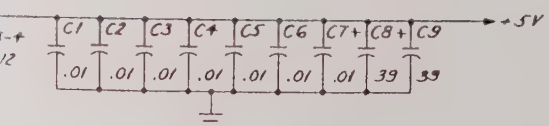

QTY REQD	FSCM NO.	PART OR IDENTIFYING NO.	NOMENCLATURE OR DESCRIPTION	MATERIAL SPECIFICATION

PARTS LIST

UNLESS OTHERWISE SPECIFIED
DIMENSIONS ARE IN INCHES
TOLERANCES ARE
FRACTIONS DECIMALS ANGLES
XX -
XXX

MATERIAL

FINISH

NEXT ASSY | USED ON

APPLICATION

DO NOT SCALE DRAWING

CONTRACT NO

APPROVALS	DATE
DRAWN R. PERL	10-25-83
CHECKED	
ENG. LAK	2-84
QA	

Giga-tronics

DISPLAY PIA

SIZE	FSCM NO	DWG NO	REV
D	58900	1010529500	A

SCALE ~ SHEET 2 of 2

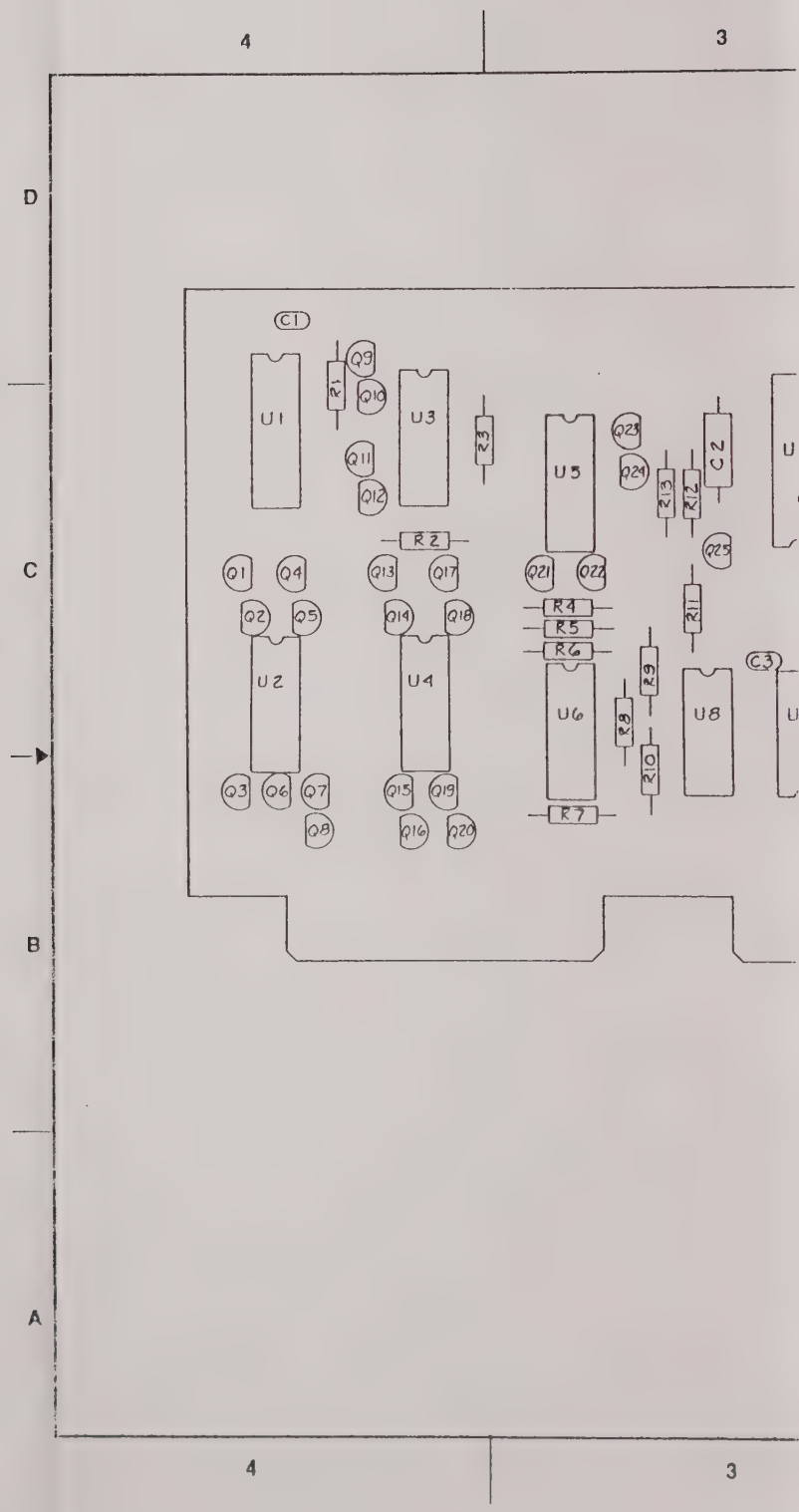
4
3
D
C
B
A
C1
U1
Q9
R1
Q10
U3
R3
Q11
Q12
U5
Q23
Q24
R13
R12
C2
R2
Q25
Q1
Q4
Q13
Q17
Q21
Q22
R4
R5
R6
R11
Q2
Q5
Q14
Q18
U2
U4
U6
R9
R8
U8
C3
R10
Q3
Q6
Q7
Q15
Q19
R7
Q8
Q16
Q20
4
3

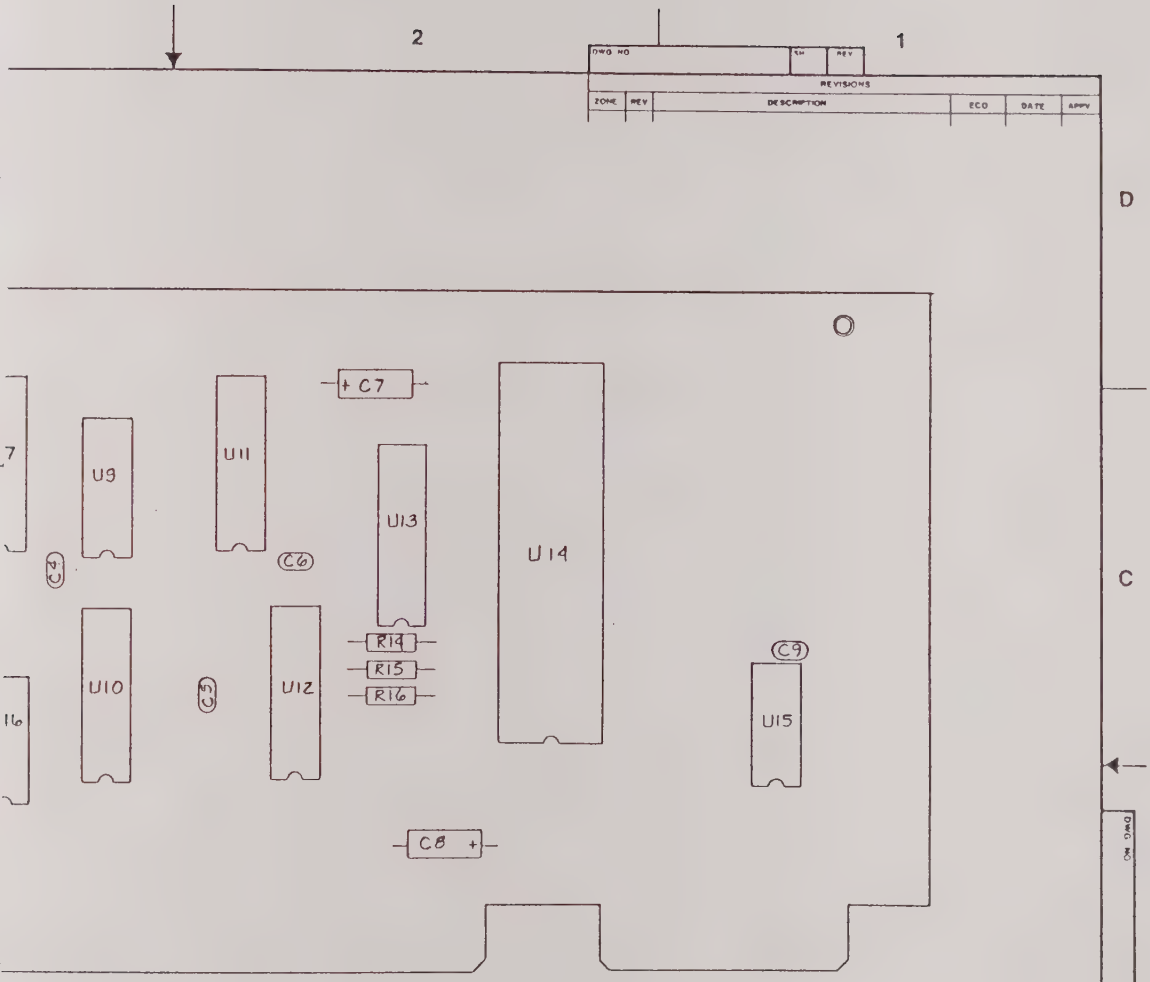

DWG NO	SH	REV

REVISIONS

ZONE	REV	DESCRIPTION	ECO	DATE	APPV

QTY REQD	FSCM NO	PART OR IDENTIFYING NO	NOMENCLATURE OR DESCRIPTION	MATERIAL SPECIFICATION

PARTS LIST

UNLESS OTHERWISE SPECIFIED DIMENSIONS ARE IN INCHES
TOLERANCES ARE
FRACTIONS DECIMALS ANGLES
XX
.XXX

CONTRACT NO

APPROVALS	DATE
DRAWN cp	3-86
CHECKED	
ENG	
QA	

MATERIAL

FINISH

NEXT ASSY	USED ON
	910

APPLICATION

DO NOT SCALE DRAWING

Gigatronics

MODULE SWITCHING

SIZE	FSCM NO	DWG NO	REV
C	58900	106CA03800	B

SCALE 2 SHEET 1 OF 2

ON DWG

SH

REV

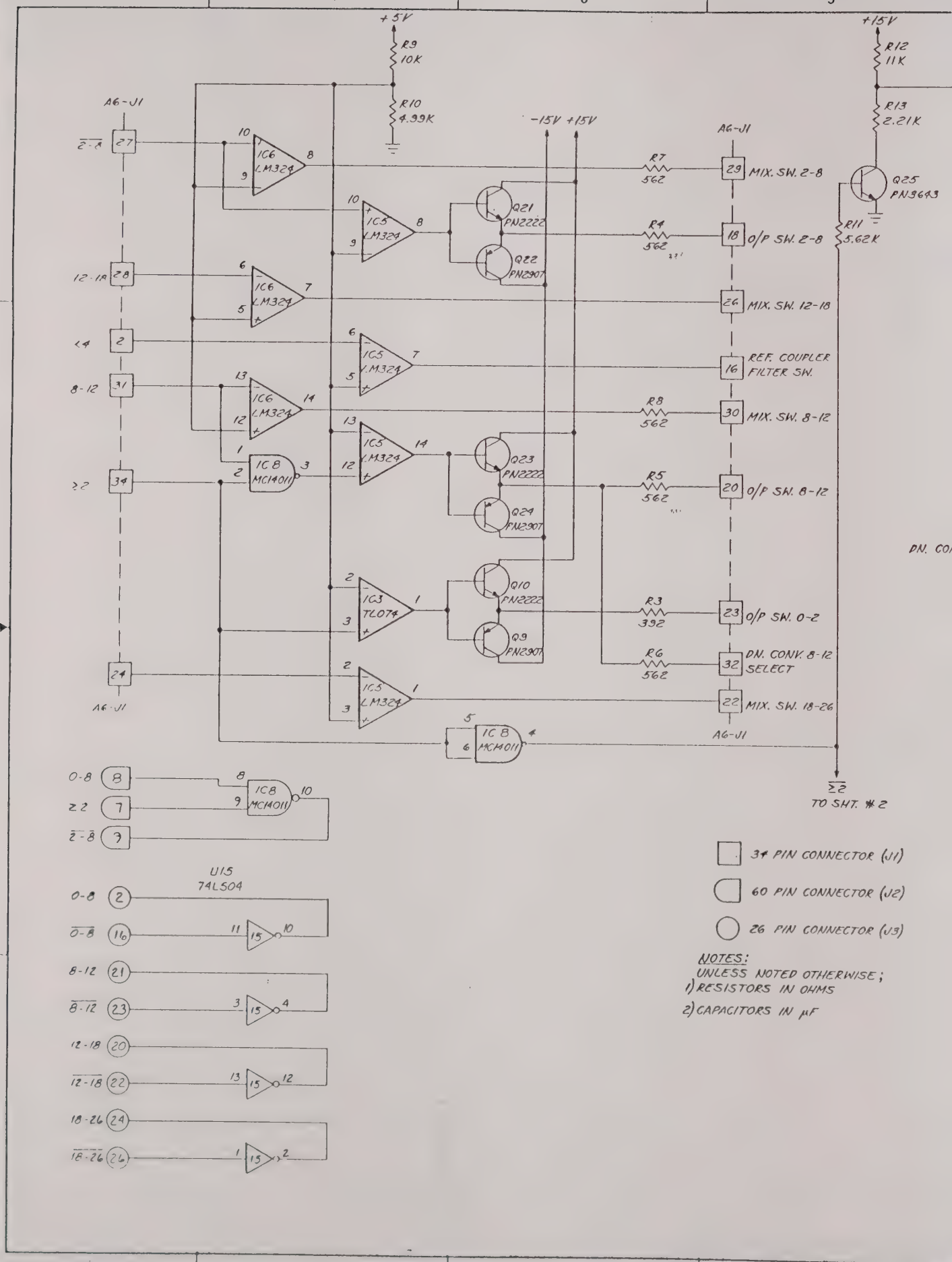

+5V
R9 10K
R10 4.99K
+15V
R12 11K
R13 2.21K
Q25 PN3643
R11 5.62K
A6-J1
-15V +15V
IC6 LM324
IC5 LM324
IC3 TL074
IC8 MC14011
Q21 PN2222
Q22 PN2907
Q23 PN2222
Q24 PN2907
Q10 PN2222
Q9 PN2907
R7 562
R4 562
R8 562
R5 562
R3 392
R6 562
MIX. SW. 2-8
O/P SW. 2-8
MIX. SW. 12-18
REF. COUPLER FILTER SW.
MIX. SW. 8-12
O/P SW. 8-12
O/P SW. 0-2
DN. CONV. 8-12 SELECT
MIX. SW. 18-26
TO SHT. #2
U15 74LS04
34 PIN CONNECTOR (J1)
60 PIN CONNECTOR (J2)
26 PIN CONNECTOR (J3)
NOTES:
UNLESS NOTED OTHERWISE;
1) RESISTORS IN OHMS
2) CAPACITORS IN μF

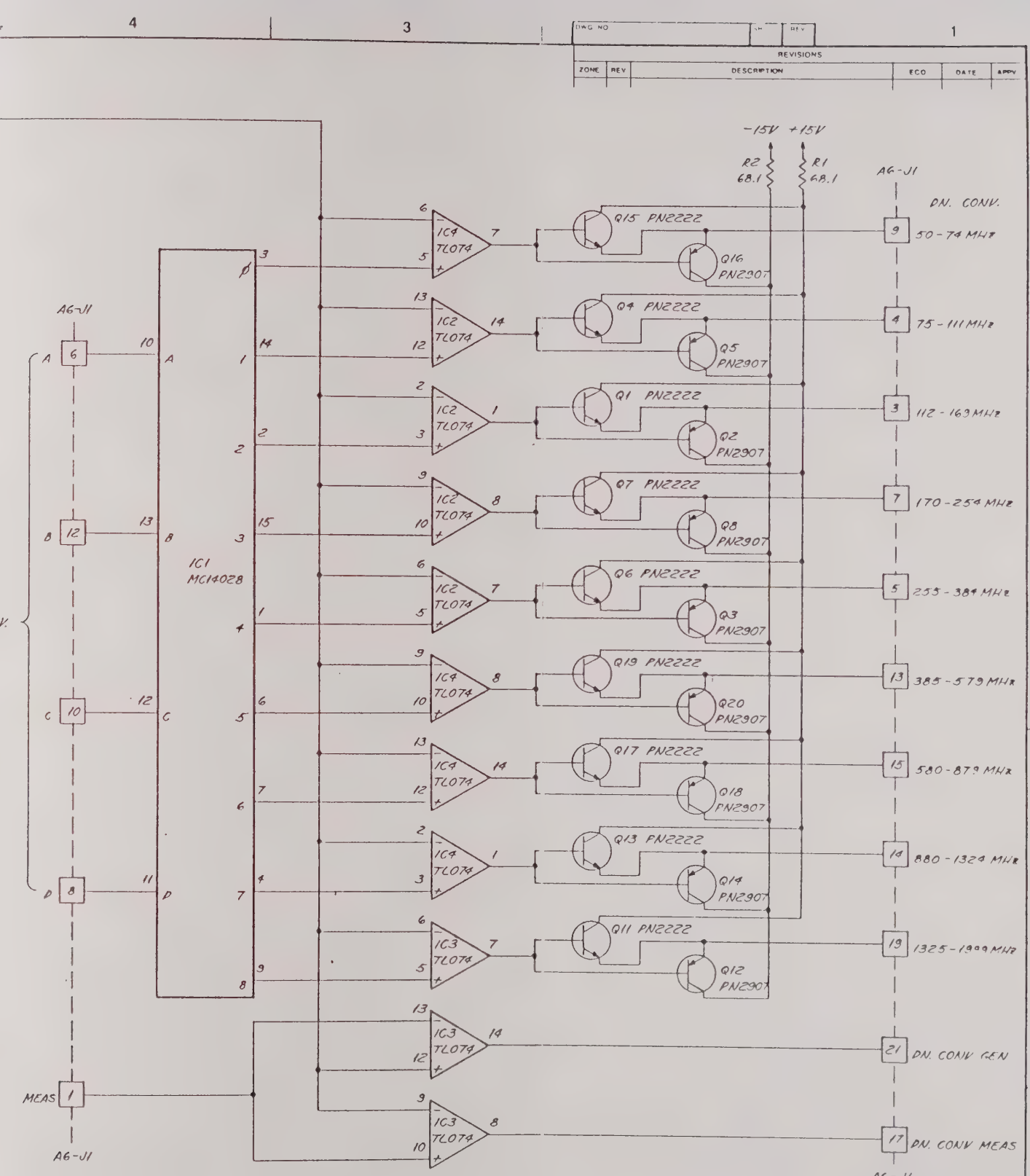

QTY REQD	FSCM NO	PART OR IDENTIFYING NO	NOMENCLATURE OR DESCRIPTION	MATERIAL SPECIFICATION

PARTS LIST

UNLESS OTHERWISE SPECIFIED
DIMENSIONS ARE IN INCHES
TOLERANCES ARE
FRACTIONS DECIMALS ANGLES
XX ·
XXX

CONTRACT NO

APPROVALS	DATE
DRAWN R. PERL	1/85
CHECKED	
ENG.	
Q	

MATERIAL

FINISH

NEXT ASSY	USED ON
APPLICATION	

DO NOT SCALE DRAWING

Giga-tronics

MODULE SWITCHING

SIZE	FSCM NO	DWG NO	REV
D	58900	1060D03800	B

SCALE ~ SHEET 1 of 2

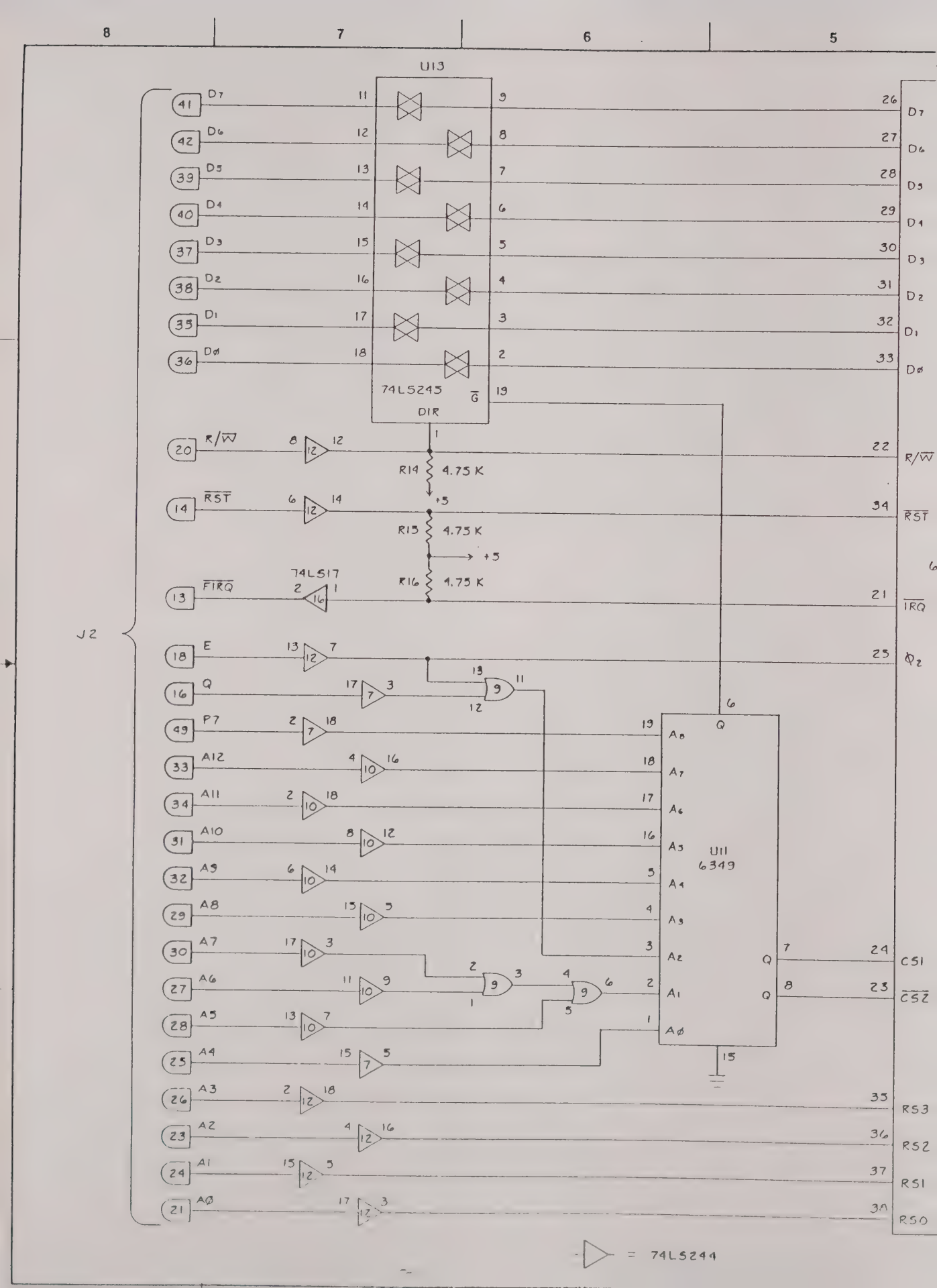
8
7
6
5
U13
74LS245
DIR
G
D7
D6
D5
D4
D3
D2
D1
D0
R/W
RST
FIRQ
74LS17
R14 4.75 K
R15 4.75 K
R16 4.75 K
+5
E
Q
P7
A12
A11
A10
A9
A8
A7
A6
A5
A4
A3
A2
A1
A0
U11
6349
CS1
CS2
RS3
RS2
RS1
RS0
IRQ
J2
= 74LS244

DWG NO	SH	REV

REVISIONS

ZONE	REV.	DESCRIPTION	ECO	DATE	APPV

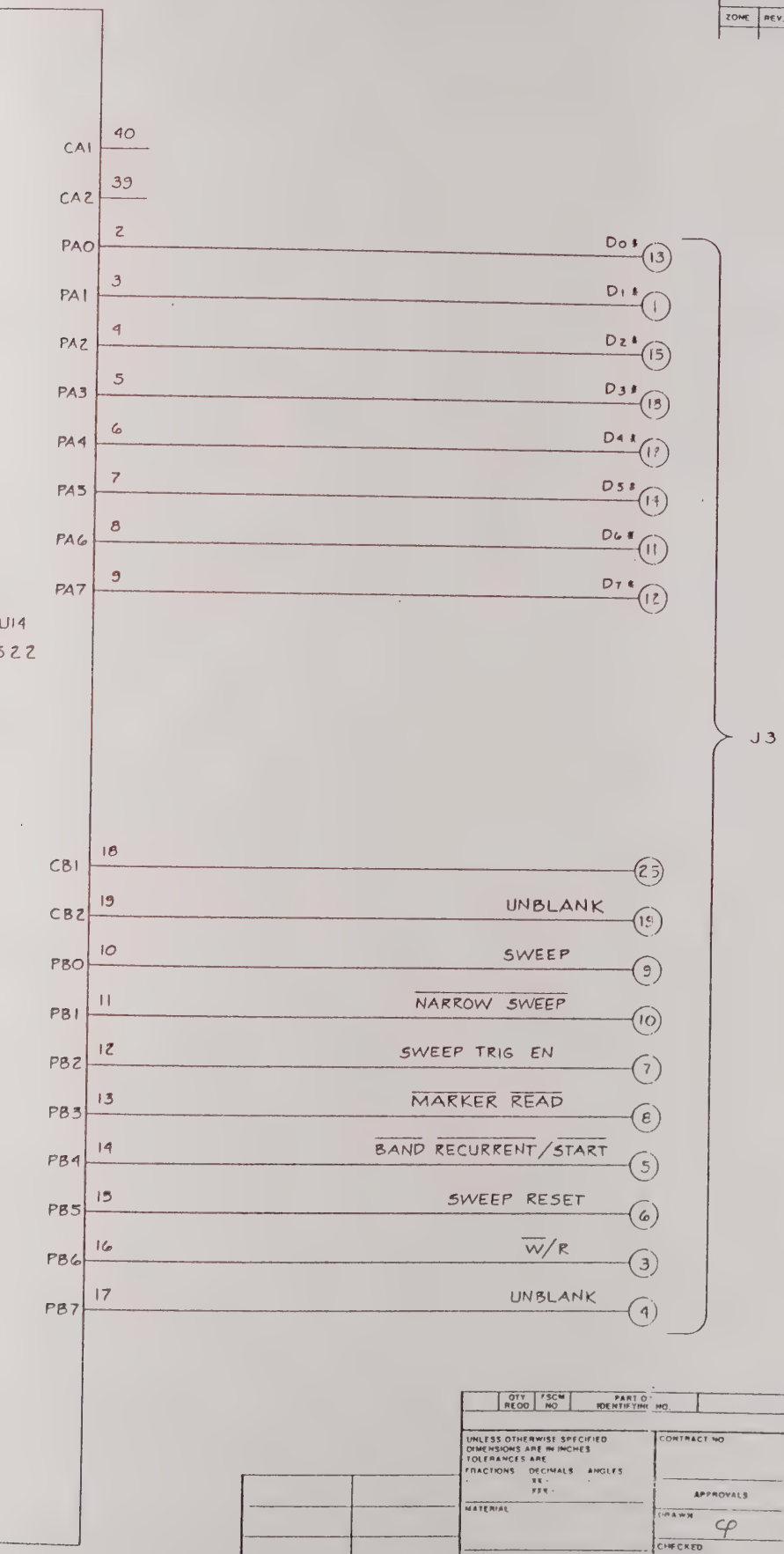

QTY REQD	FSCM NO	PART OR IDENTIFYING NO.	NOMENCLATURE OR DESCRIPTION	MATERIAL SPECIFICATION

PARTS LIST

UNLESS OTHERWISE SPECIFIED DIMENSIONS ARE IN INCHES
TOLERANCES ARE
FRACTIONS DECIMALS ANGLES
. XX .
. XXX .

MATERIAL

FINISH

DO NOT SCALE DRAWING

CONTRACT NO

APPROVALS	DATE
DRAWN cp	2-86
CHECKED	
ENG	
QA	

Giga-tronics

MODULE SWITCHING

NEXT ASSY	USED ON

APPLICATION

SIZE	FSCM NO.	DWG NO	REV
D	58900	1060503800	B

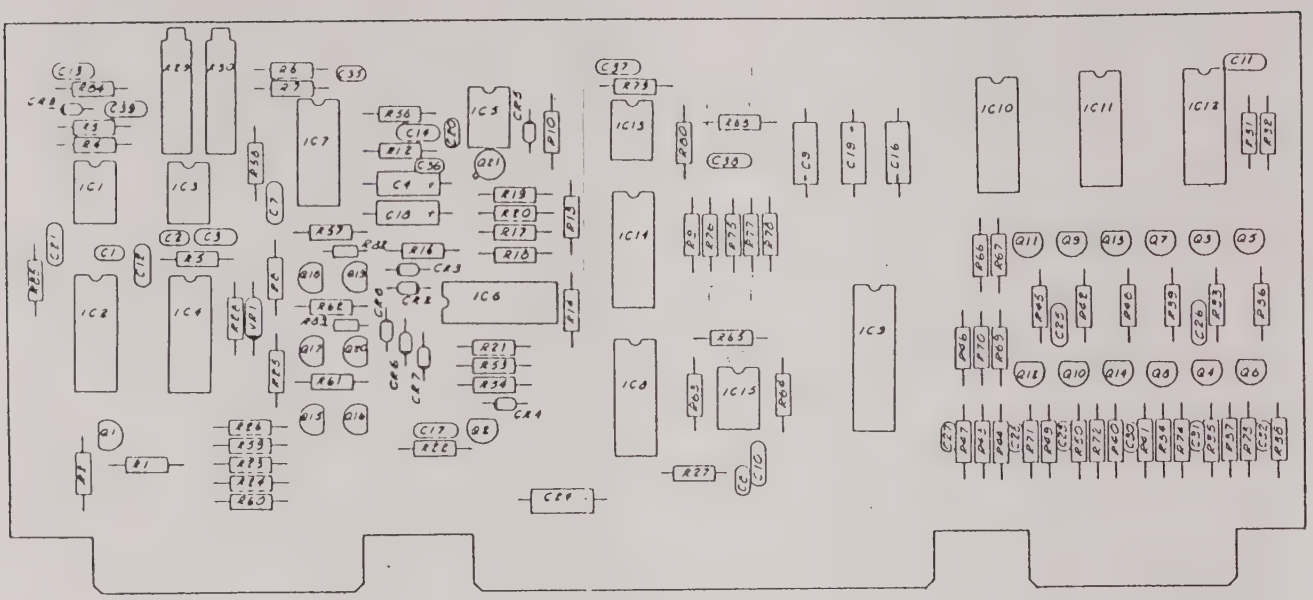

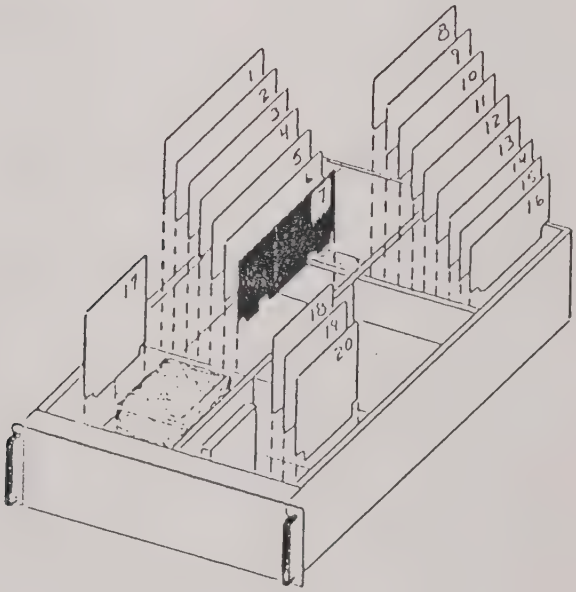

FIG: 7.A7.1
AM LEVEL CONTROL PC ASSY (A7)
DWG# 101BM26200 SHT 1

REV D

LEVEL CONTROL -- PC Board A7

This circuit board performs a number of functions related to amplitude control, frequency sweeping, and pulse modulation.

AMPLITUDE CONTROL

Digital to analog converter IC4 is used by the computer to generate the level reference. The analog reference output is applied to IC5-2, the summing junction of the Automatic Level Control (ALC) loop amplifier. Other inputs to the amplifer include the log-amplified level detector input from the Level Log Amp (A19), the AM input if any, and the front panel RF vernier.

The loop amplifier (IC5-1) has multiple feedback paths; these are selected by the computer via IC7 and IC14 in order to set the loop speed appropriately. The loop amplifier also has multiple outputs, selected via IC6, which drive the leveler circuit in the appropriate RF module.

IC6-1 and Q2 are used as an indicator circuit; the output at Q2's collector goes low ('UNLEVELED') when the leveling loop is out of range.

Analog to digital converter IC9 accepts the amplified signal from the power detector and converts it into a digital number for use by the front panel power display.

SWEEP FUNCTIONS

Digital to analog converter IC2 is used by the computer to generate a voltage ramp during a frequency sweep. The DAC is programmed with numbers in sequence corresponding to a 0 volt to +10 volt ramp from sweep start to sweep stop. Transistor Q1 (sheet 2) converts the computer's pen lift command into an output signal compatible with most recorders.

PULSE MODULATION (sheet 2)

The driver circuits for all pulse modulators are located on this board. The computer uses IC10, together with six NAND gates, to direct the modulation pulses (received from the A17 PC board) to the appropriate driver.

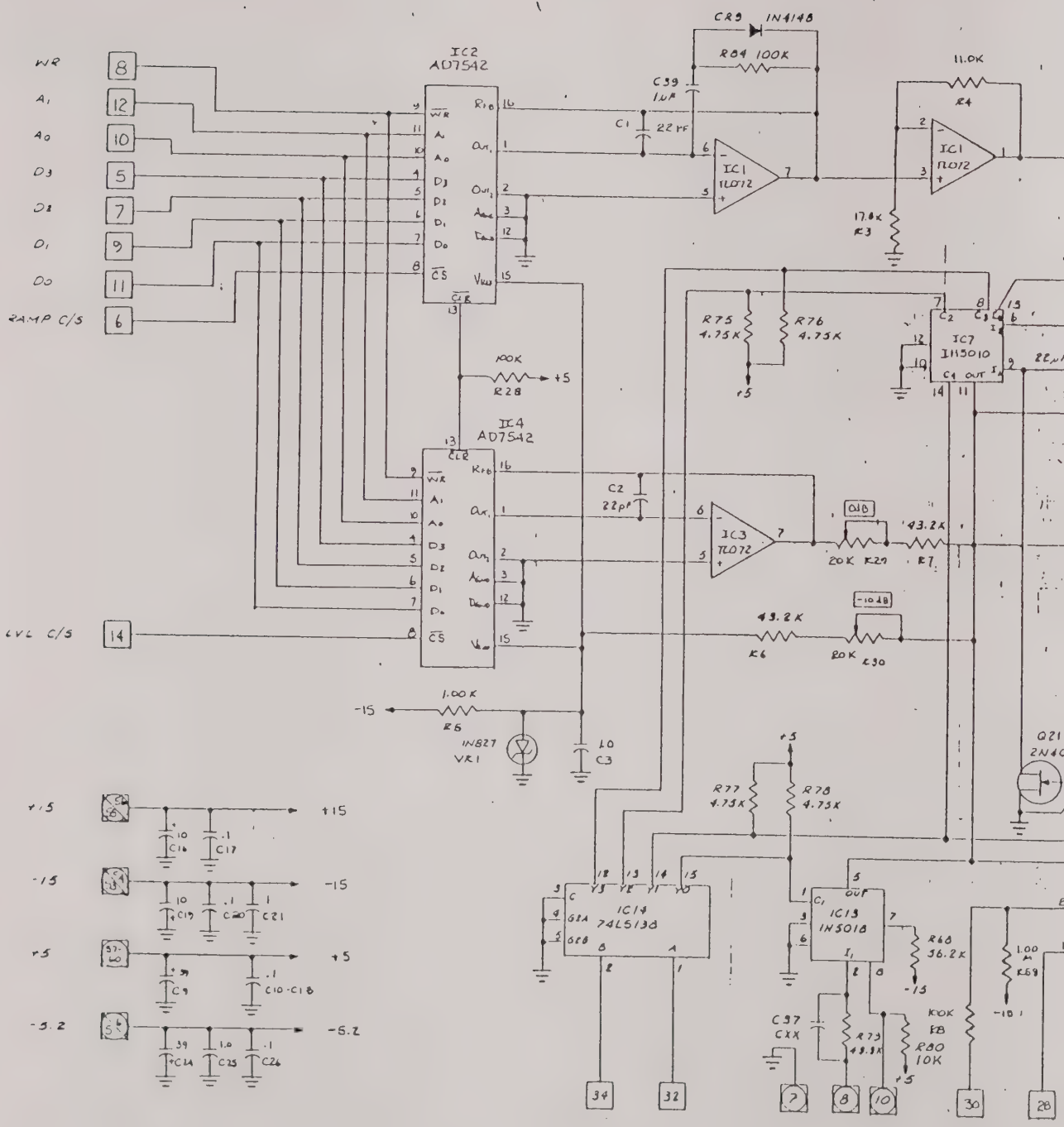
WR
A1
A0
D3
D2
D1
D0
RAMP C/S
LVL C/S
IC2 AD7542
IC4 AD7542
CR9 IN4148
R84 100K
C39 1UF
C1 22PF
IC1 TL072
11.0K
R4
17.8K R3
R75 4.75K
R76 4.75K
IC7 LM3010
100K R28
+5
C2 22pF
IC3 TL072
20K R29
43.2K R7
43.2K R6
20K R30
-10 dB
1.00K R6
IN827 VR1
C3 10
R77 4.75K
R78 4.75K
IC14 74LS138
IC13 IN5018
R68 36.2K
C37 CXX
R73 49.9K
100K FB
R80 10K
+15
-15
+5
-5.2
C16 10
C17 .1
C19 10
C20 .1
C21 1
C9 .1
C10-C18
C24 39
C25 1.0
C26 .1
ALC SELECT
AM IN
CTR>2
VERNIER SEL

NOTE :

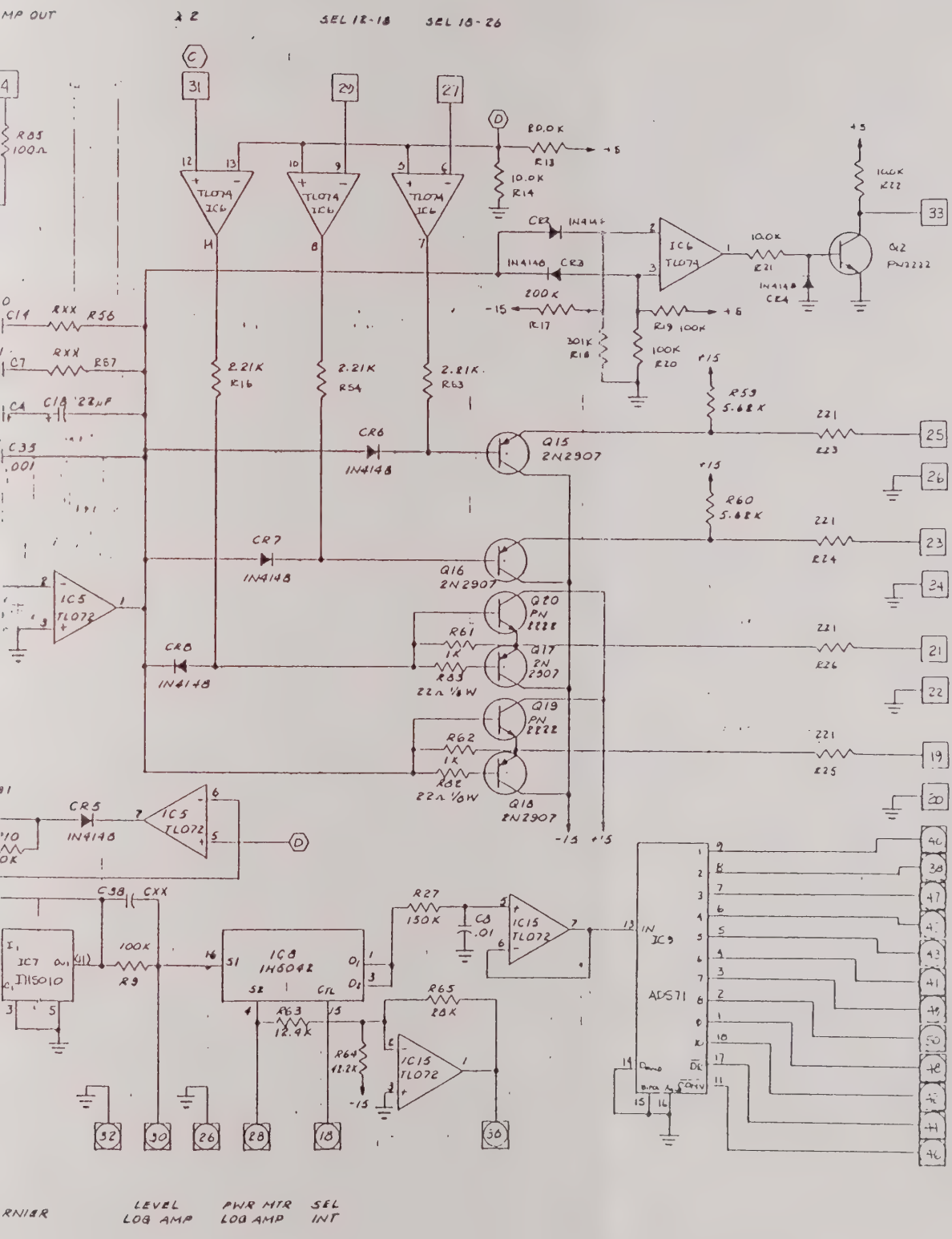

FIG: 7.A7.2
AM LEVEL CONTROL PC ASSY (A7)
DWG# 101BM26200 SHT 2

REV D

7-A7-2

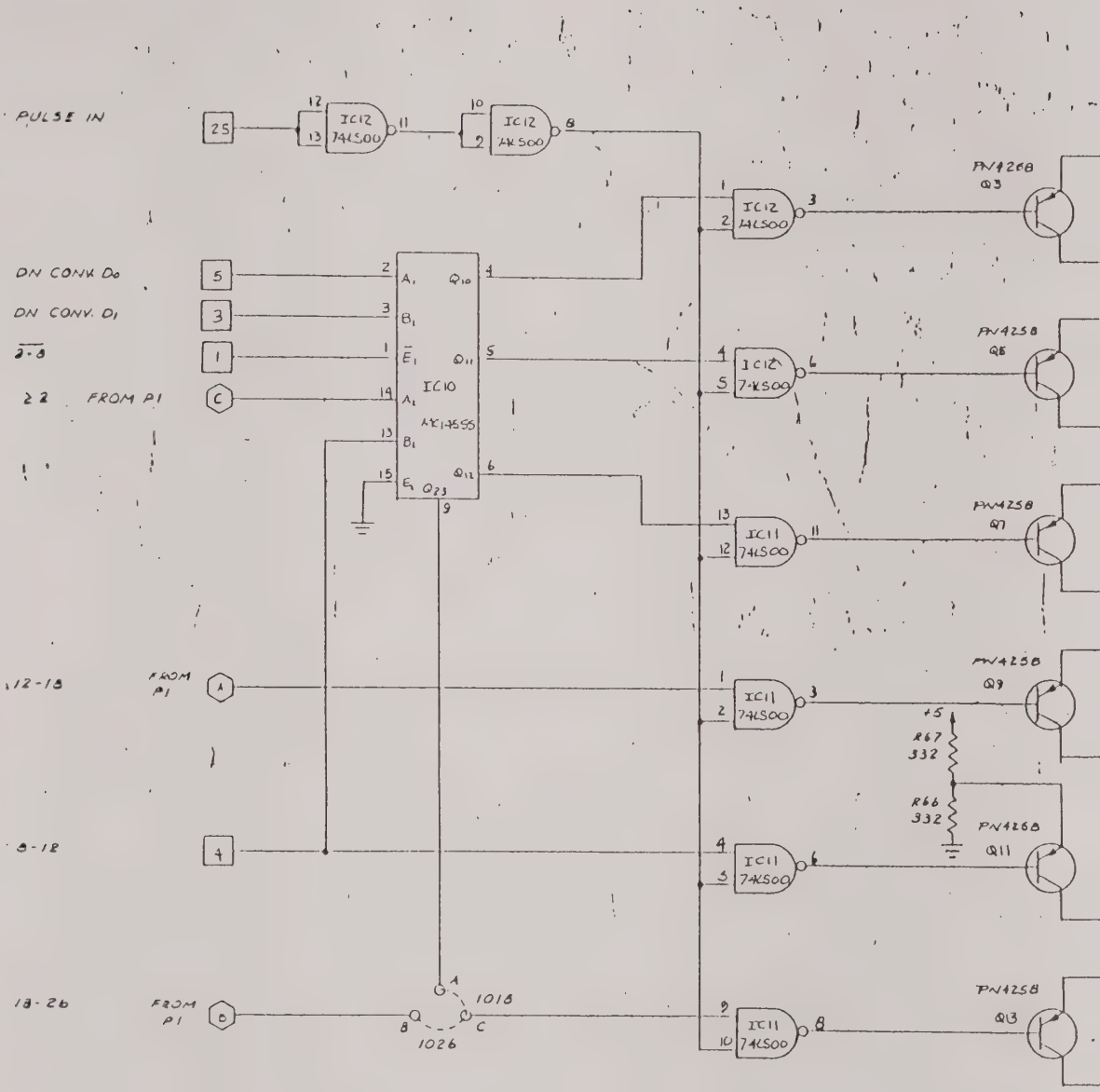

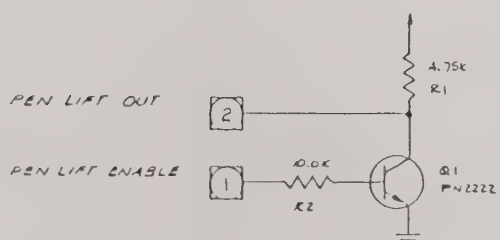

IC#	TYPE	PIN # 16	PIN # 8-16	PIN # 115	PIN # 16
1,3,5,15	TL072			8	4
5,4	AD7542	14	–		
7	IH5010				1
6	TL074			4	11
8	IH5042	12	13	11	14
9	AD571	10	–		12
10	MC14555	16	8		
11, 12	74LS00	14	7		
14	74LS138	16	8		
13	IH5018				

UNLESS OTHERWISE NOTED:

1- RESISTORS IN OHMS
2- CAPACITORS IN µF

NOTE:

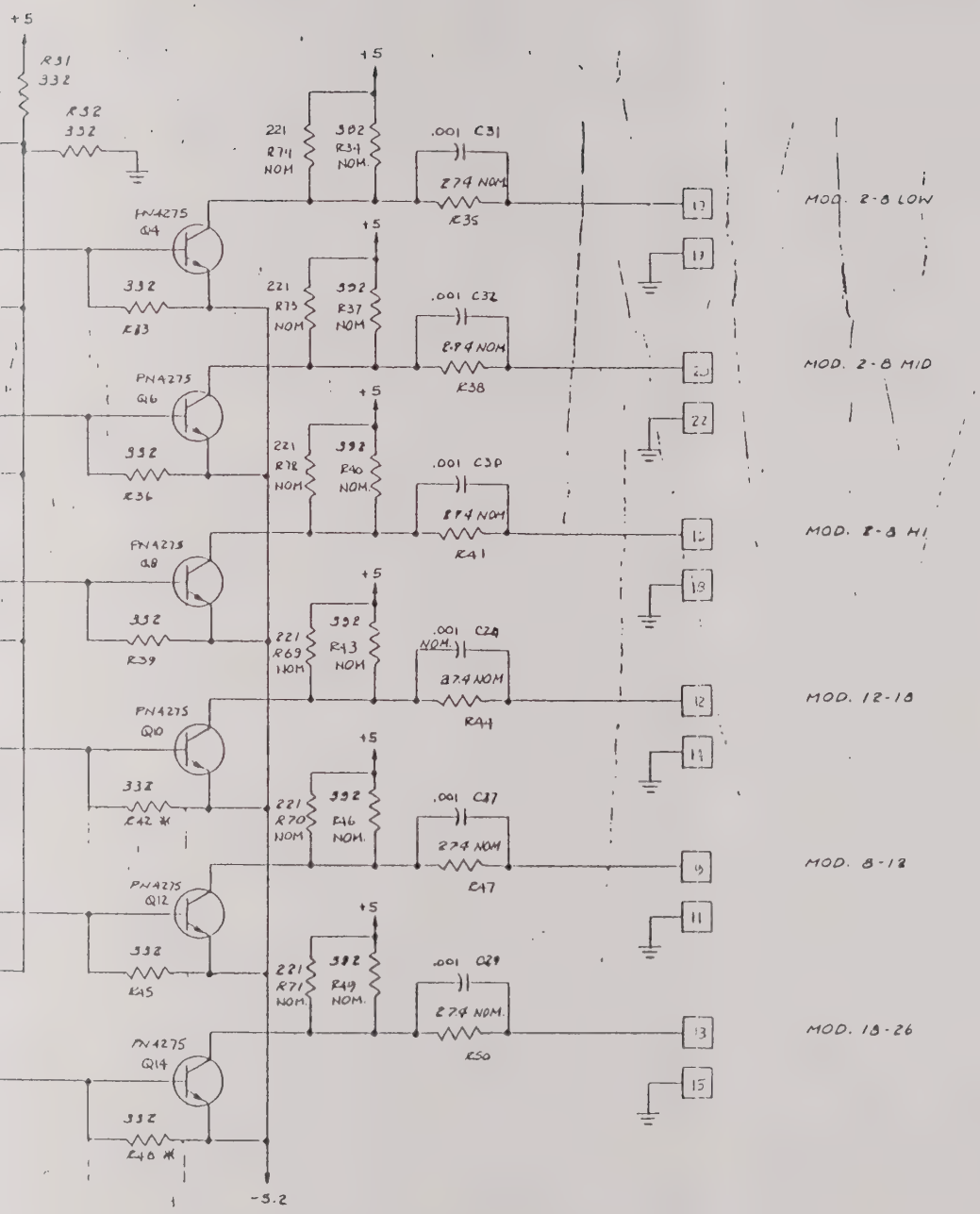

* MODEL 1026 ONLY: R42/R48 TO BE 150Ω

[ ] SYMBOL IS 34 PIN CONNECTOR
DIGITS ARE 26 PIN CONNECTOR

FIG: 7.A7.3
AM LEVEL CONTROL PC ASSY (A7)
DWG# 101BM26200 SHT 3

ZONE	REV	DESCRIPTION	ECO	DATE	APPV
	F	ADD R32-R34, Q6, Q7	1123	6-84	BJ
	G	R1 WAS 68 ohm 1/2 W	1161	8-85	BJ

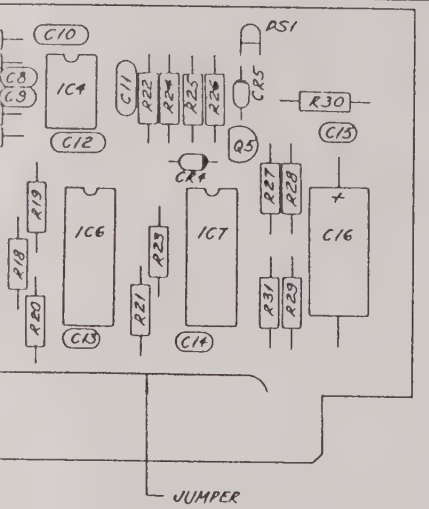

QTY REQD	FSCM NO	PART OR IDENTIFYING NO	NOMENCLATURE OR DESCRIPTION	MATERIAL SPECIFICATION

PARTS LIST

	900
	1018
	1026
	USED ON
APPLICATION	

UNLESS OTHERWISE SPECIFIED DIMENSIONS ARE IN INCHES
TOLERANCES ARE
FRACTIONS DECIMALS ANGLES
XX
XXX

MATERIAL

FINISH

DO NOT SCALE DRAWING

CONTRACT NO

APPROVALS	DATE
DRAWN R. PERL	5/16/84
CHECKED	
ENG LAK	6/84
QA	

Giga-tronics

100 MHz PHASE LOCK LOOP A8

SIZE B | FSCM NO 58900 | DWG NO 1018A04900 | REV G

SCALE 2:1 | SHEET 1 of 2

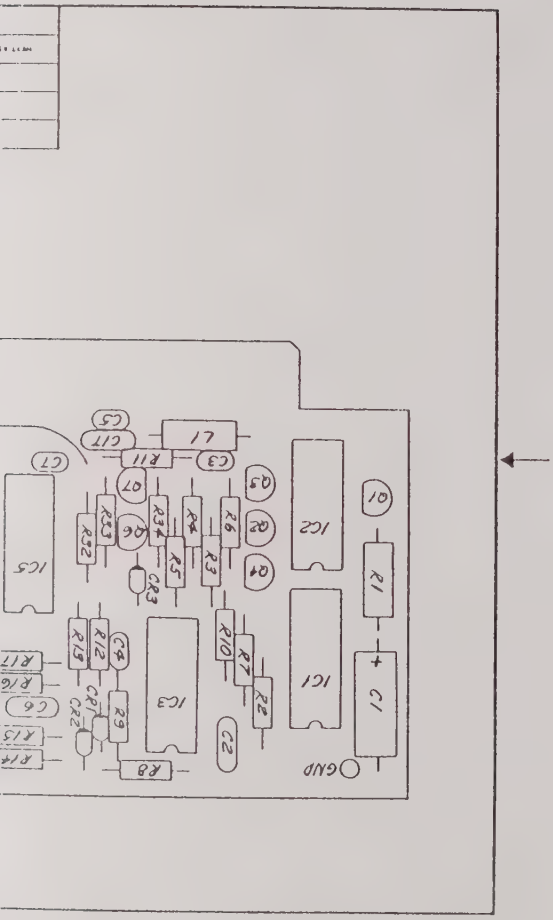

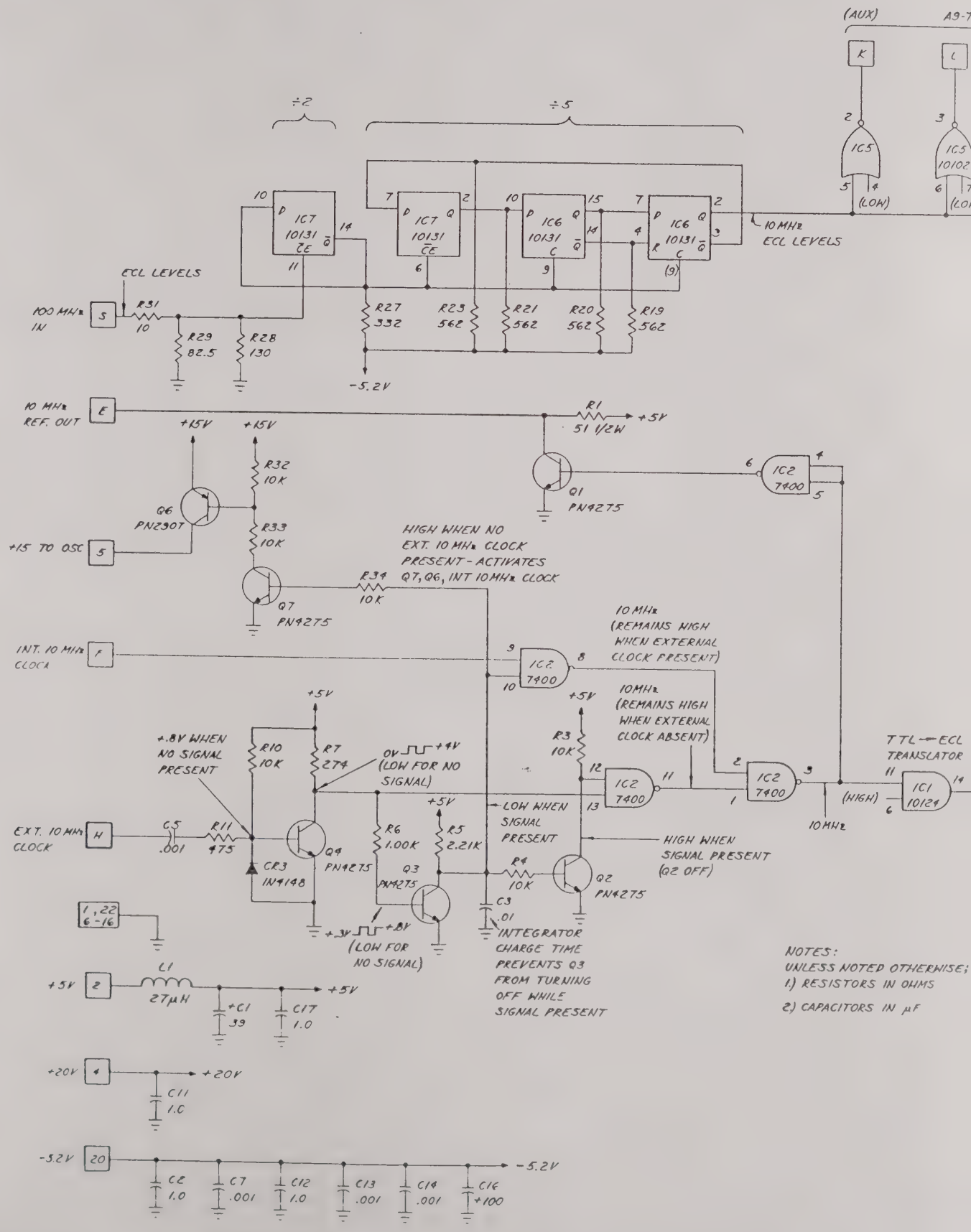
÷2
÷5
IC7 10131
IC6 10131
IC5 10102
10 MHz ECL LEVELS
ECL LEVELS
100 MHz IN
R31 10
R29 82.5
R28 130
R27 332
R23 562
R21 562
R20 562
R19 562
-5.2V
10 MHz REF. OUT
+15V
R32 10K
R33 10K
Q6 PN2907
+15 TO OSC
R34 10K
Q7 PN4275
R1 51 1/2W
+5V
Q1 PN4275
IC2 7400
HIGH WHEN NO EXT. 10 MHz CLOCK PRESENT - ACTIVATES Q7, Q6, INT 10 MHz CLOCK
INT. 10 MHz CLOCK
10 MHz (REMAINS HIGH WHEN EXTERNAL CLOCK PRESENT)
10MHz (REMAINS HIGH WHEN EXTERNAL CLOCK ABSENT)
+.8V WHEN NO SIGNAL PRESENT
R10 10K
R7 274
0V (LOW FOR NO SIGNAL) +4V
R3 10K
TTL → ECL TRANSLATOR
IC1 10124
(HIGH)
10MHz
EXT. 10 MHz CLOCK
C5 .001
R11 475
Q4 PN4275
CR3 IN4148
R6 1.00K
R5 2.21K
Q3 PN4275
LOW WHEN SIGNAL PRESENT
HIGH WHEN SIGNAL PRESENT (Q2 OFF)
R4 10K
Q2 PN4275
C3 .01
INTEGRATOR CHARGE TIME PREVENTS Q3 FROM TURNING OFF WHILE SIGNAL PRESENT
+.3V +.8V (LOW FOR NO SIGNAL)
1, 22 6-16
L1 27μH
+C1 39
C17 1.0
+20V
C11 1.0
-5.2V
C2 1.0
C7 .001
C12 1.0
C13 .001
C14 .001
C16 +100
NOTES:
UNLESS NOTED OTHERWISE;
1.) RESISTORS IN OHMS
2.) CAPACITORS IN μF

DWG NO	SH	REV

REVISIONS

ZONE	REV	DESCRIPTION	ECO	DATE	APPV
	F	REDRAWN		9-84	B
	G	R1 WAS 68 Ω 1/2 W	1161	8-85	B

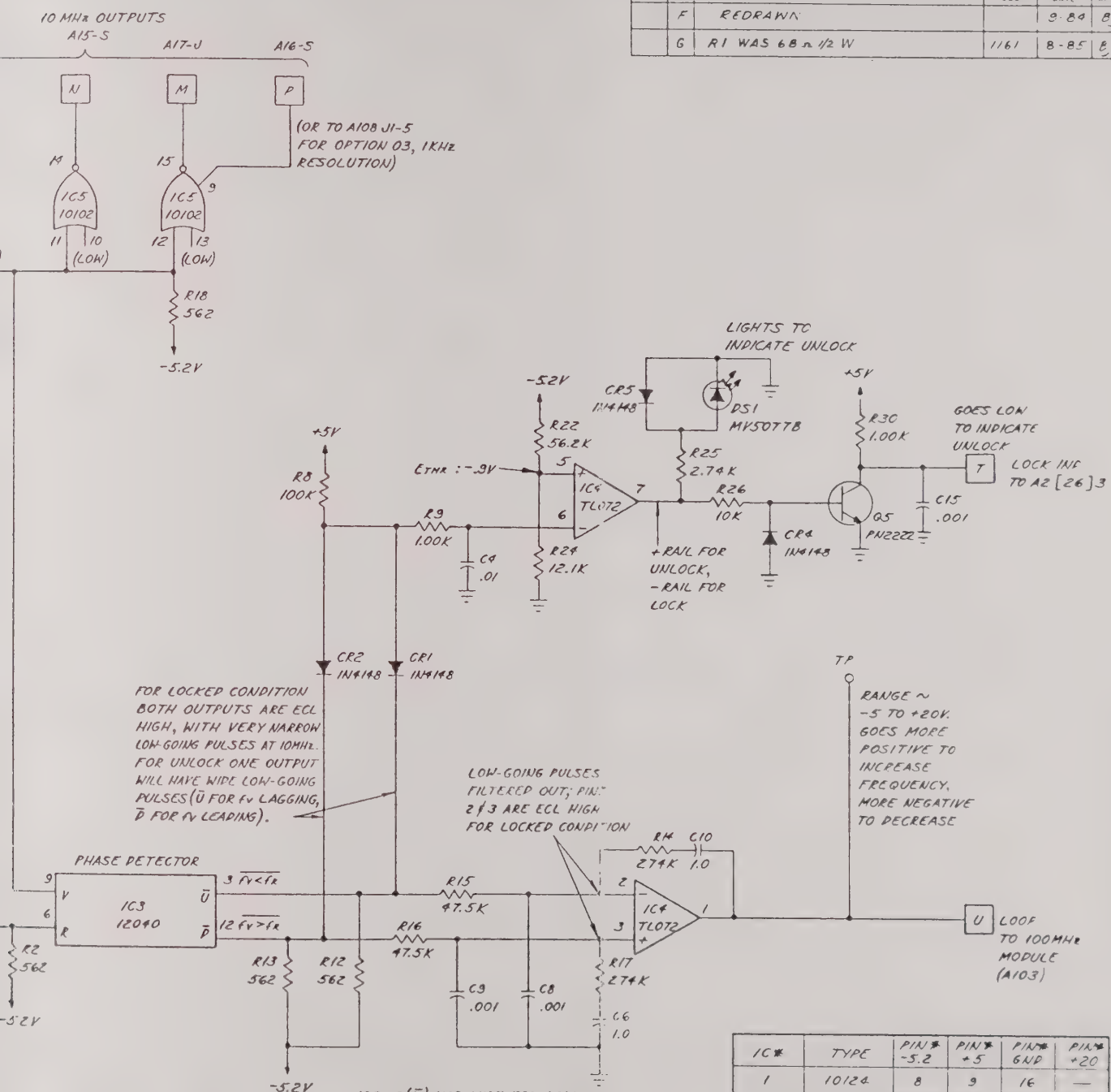

IC3-3 (Ū) HAS WIDE ECL-LOW PULSES WHEN fv LAGS REFERENCE; CAUSES IC4-1 TO GO POSITIVE

IC3-12 (D̄) HAS WIDE ECL-LOW PULSES WHEN fv LEADS REFERENCE; CAUSES IC4-1 TO GO NEGATIVE

IC#	TYPE	PIN# -5.2	PIN# +5	PIN# GND	PIN# +20
1	10124	8	9	16	—
2	7400	—	14	7	—
3	12040	7	—	1,14	—
4	TL072	4	—	—	8
5	10102	8	—	1,16	—
6,7	10131	8	—	1,16	—

QTY REQD	FSCM NO	PART OR IDENTIFYING NO	NOMENCLATURE OR DESCRIPTION	MATERIAL SPECIFICATION

PARTS LIST

NEXT ASSY	USED ON
	900
	1018
	1026

APPLICATION

UNLESS OTHERWISE SPECIFIED DIMENSIONS ARE IN INCHES TOLERANCES ARE FRACTIONS DECIMALS ANGLES .XX .XXX

MATERIAL

FINISH

DO NOT SCALE DRAWING

CONTRACT NO

APPROVALS	DATE
DRAWN R. PERL	8-84
CHECKED	
ENG L A KAYE	8-84
QA	

Giga-tronics

100 MHz PLL P.C. ASS'Y. -AE

SIZE D | FSCM NO 58900 | DWG NO 101DS0490C

SCALE ~ | SHEET 1 of 1

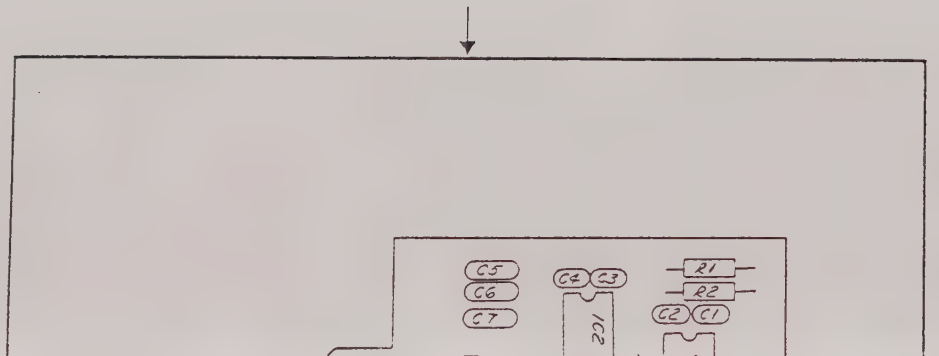
C5
C6
C7
C4
C3
IC2
R1
R2
C2
C1

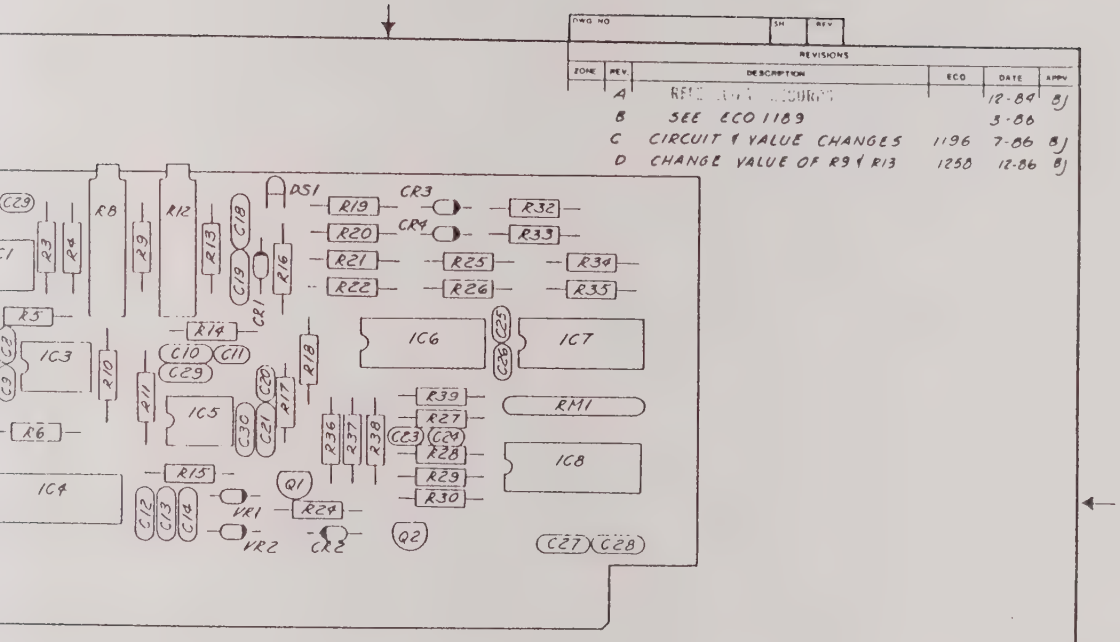

DWG NO	SH	REV

REVISIONS

ZONE	REV.	DESCRIPTION	ECO	DATE	APPV
	A	[illegible]		12-84	BJ
	B	SEE ECO 1189		3-86	
	C	CIRCUIT & VALUE CHANGES	1196	7-86	BJ
	D	CHANGE VALUE OF R9 & R13	1250	12-86	BJ

PARTS LIST

QTY REQD	FSCM NO	PART OR IDENTIFYING NO	NOMENCLATURE OR DESCRIPTION	MATERIAL SPECIFICATION

UNLESS OTHERWISE SPECIFIED DIMENSIONS ARE IN INCHES
TOLERANCES ARE
FRACTIONS DECIMALS ANGLES
.XX ±
.XXX

MATERIAL

FINISH

NEXT ASSY | USED ON

APPLICATION

DO NOT SCALE DRAWING

CONTRACT NO

APPROVALS	DATE
DRAWN R. PERL	9/84
CHECKED	
ENGR HAK	3/85
QA	

Giga-tronics

FM OUTPUT PLL

SIZE	FSCM NO	DWG NO	REV
B	58900	105BA10500	D

SCALE 2:1 | QTY. 1 PER UNIT | SHEET 1 of 2

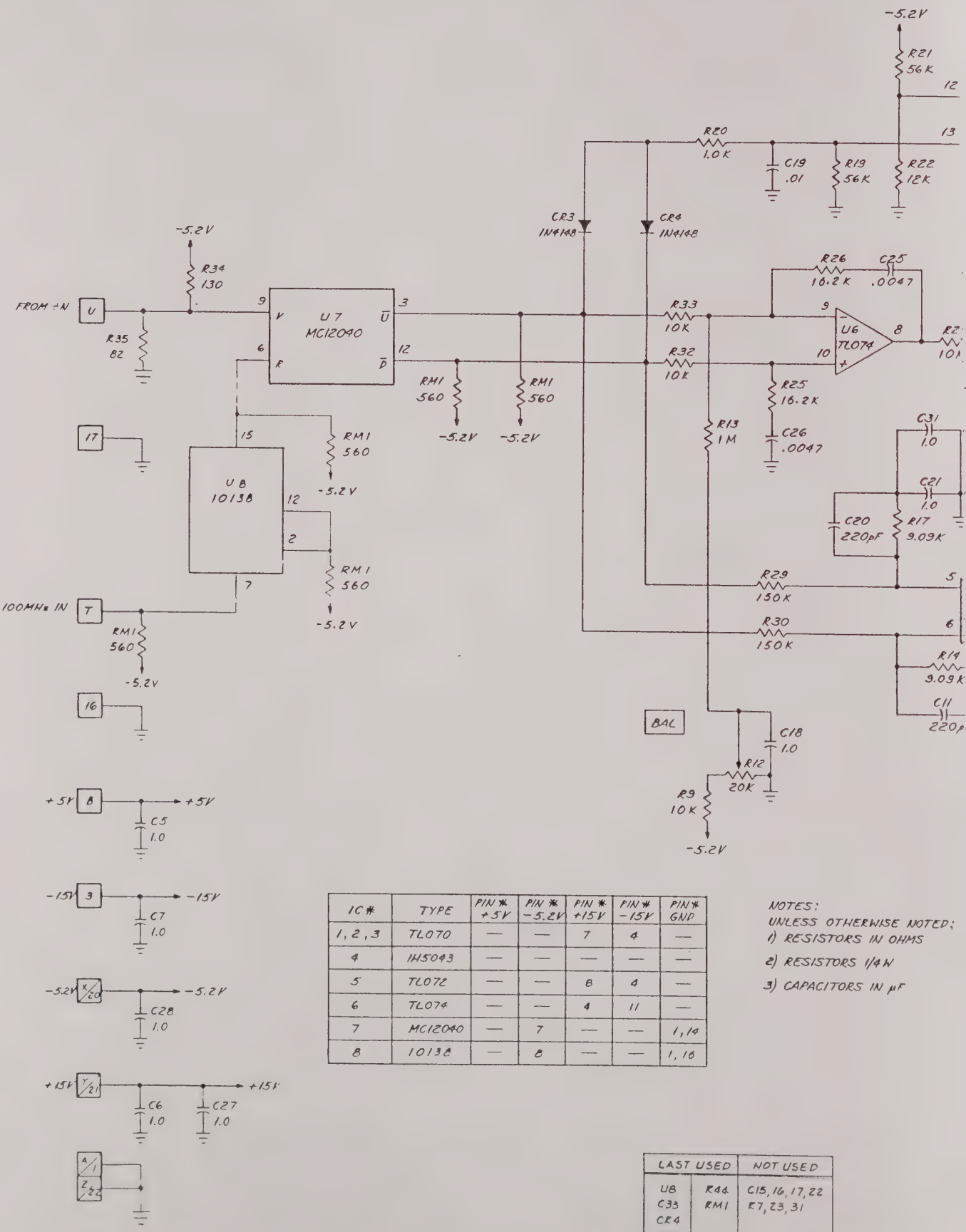

IC #	TYPE	PIN # +5V	PIN # -5.2V	PIN # +15V	PIN # -15V	PIN # GND
1, 2, 3	TL070	—	—	7	4	—
4	IH5043	—	—	—	—	—
5	TL072	—	—	8	4	—
6	TL074	—	—	4	11	—
7	MC12040	—	7	—	—	1, 14
8	10138	—	8	—	—	1, 16

NOTES:
UNLESS OTHERWISE NOTED;
1) RESISTORS IN OHMS
2) RESISTORS 1/4 W
3) CAPACITORS IN μF

LAST USED		NOT USED
U8	R44	C15, 16, 17, 22
C33	RM1	R7, 23, 31
CR4		
VR2		
DS1		
Q2		

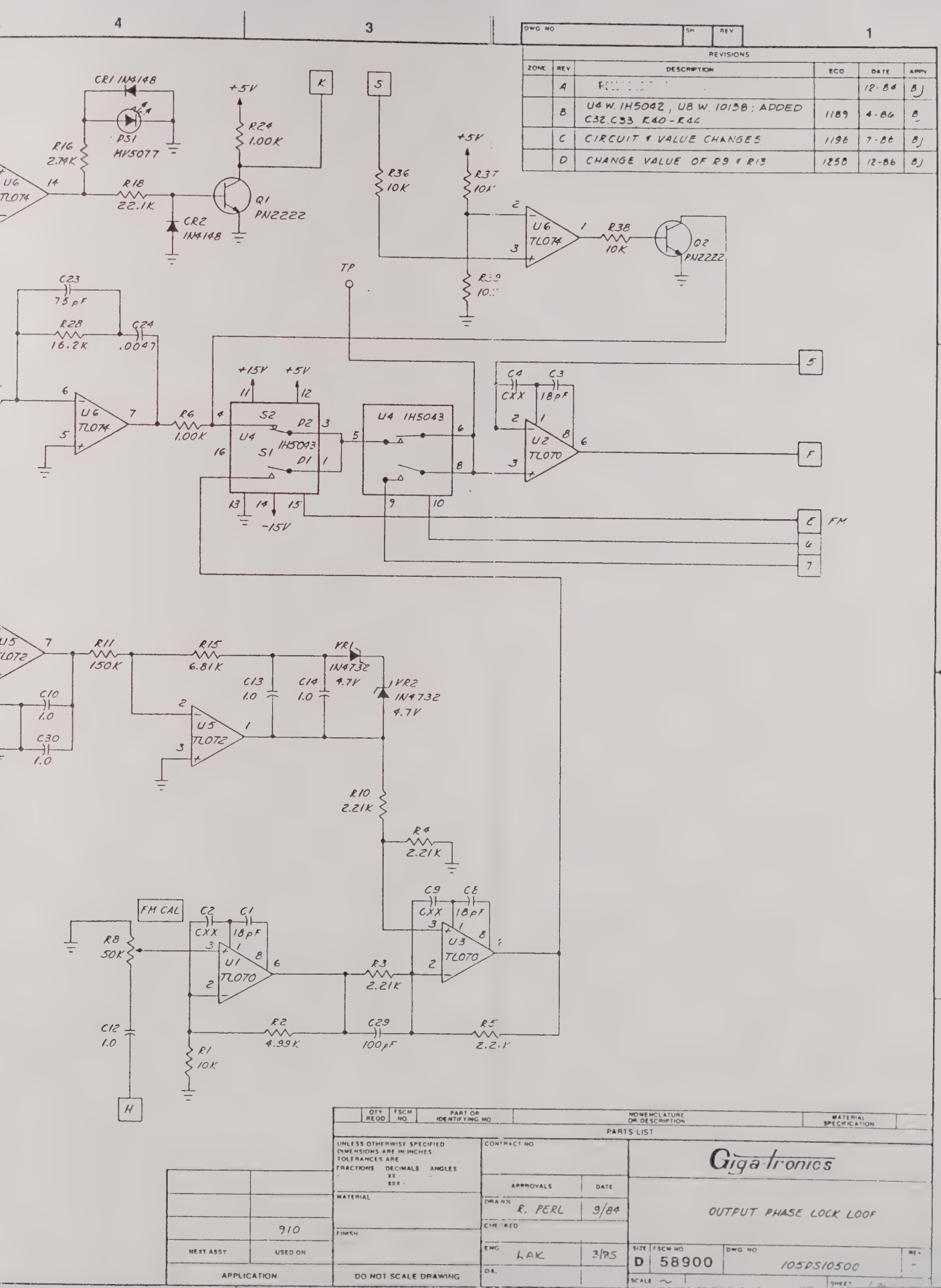
4
3
1
DWG NO
SH
REV
REVISIONS
ZONE | REV | DESCRIPTION | ECO | DATE | APPV
A | [illegible] | | 12-84 | BJ
B | U4 W. IH5042, U8 W. 10138; ADDED C32,C33, R40-R42 | 1189 | 4-86 | B
C | CIRCUIT & VALUE CHANGES | 1196 | 7-86 | BJ
D | CHANGE VALUE OF R9 & R13 | 1258 | 12-86 | BJ
CR1 IN4148
DS1 MV5077
R16 2.74K
R18 22.1K
CR2 IN4148
+5V
R24 1.00K
Q1 PN2222
K
S
R36 10K
R37 10K
R39 10K
U6 TL074
R38 10K
Q2 PN2222
TP
C23 75 pF
R28 16.2K
C24 .0047
R6 1.00K
+15V
+5V
-15V
S2
S1
D2
D1
U4 IH5043
C4 CXX
C3 18pF
U2 TL070
5
F
E
FM
6
7
U5 TL072
R11 150K
R15 6.81K
VR1 IN4732 4.7V
VR2 IN4732 4.7V
C13 1.0
C14 1.0
C10 1.0
C30 1.0
R10 2.21K
R4 2.21K
C9 CXX
C8 18pF
U3 TL070
FM CAL
C2 CXX
C1 18pF
R8 50K
U1 TL070
R3 2.21K
C12 1.0
R2 4.99K
C29 100pF
R5 2.21K
R1 10K
H
QTY REQD | FSCM NO | PART OR IDENTIFYING NO | NOMENCLATURE OR DESCRIPTION | MATERIAL SPECIFICATION
PARTS LIST
UNLESS OTHERWISE SPECIFIED DIMENSIONS ARE IN INCHES TOLERANCES ARE FRACTIONS DECIMALS ANGLES .X ±.1 .XX ±.01 .XXX ±.005
MATERIAL
FINISH
DO NOT SCALE DRAWING
CONTRACT NO
APPROVALS | DATE
DRAWN R. PERL 9/84
CHECKED
ENG LAK 3/85
DA
Giga-tronics
OUTPUT PHASE LOCK LOOP
SIZE D | FSCM NO 58900 | DWG NO 105DS10500 | REV -
SCALE ~ | SHEET
910
NEXT ASSY | USED ON
APPLICATION

C3
C1
0.1
1
7812
VC9
7912
VC8
C2
1
1.0
C4
C5
1.0

DWG NO	SH	REV

REVISIONS

ZONE	REV	DESCRIPTION	ECO	DATE	APPV
	C	[illegible]		3/85	BJ
	D	ADDED C23, VR2, R29	1173	12/85	BJ
	E	R18 WAS 100 Ω	1174	1-86	BJ

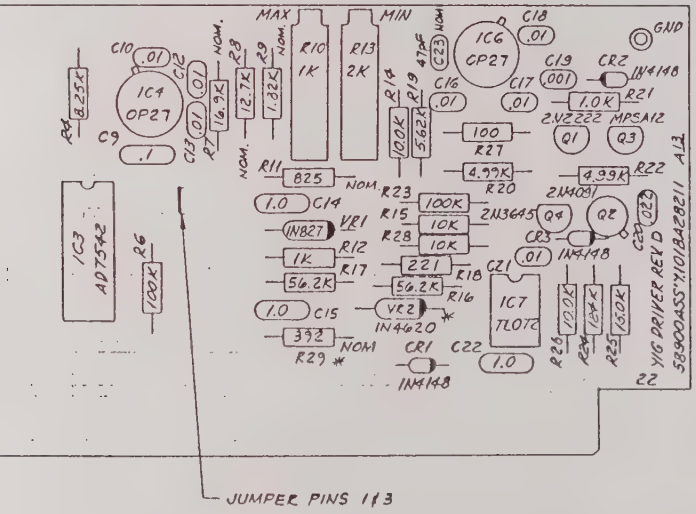

JUMPER PINS 1 & 3

NOTES:
UNLESS NOTED OTHERWISE;
1) RESISTORS IN OHMS
2) CAPACITORS IN μF
3) VR2 & R29 MARKED * TO BE INSTALLED ONLY IN UNITS WHICH GO TO 26 GHz

QTY REQD	FSCM NO	PART OR IDENTIFYING NO.	NOMENCLATURE OR DESCRIPTION	MATERIAL SPECIFICATION

PARTS LIST

NEXT ASSY	USED ON
APPLICATION	

UNLESS OTHERWISE SPECIFIED DIMENSIONS ARE IN INCHES
TOLERANCES ARE:
FRACTIONS DECIMALS ANGLES
.XX ±
.XXX ±

MATERIAL

FINISH

DO NOT SCALE DRAWING

CONTRACT NO

APPROVALS	DATE
DRAWN R. PERL	12/84
CHECKED	
ENG. LAK	3/85
QA	

Giga-tronics

YIG DRIVER A13
1.9 - 8.7 GHz

SIZE	FSCM NO	DWG NO	REV
B	58900	10/BAZB211	E

SCALE | SHEET 1 of 1

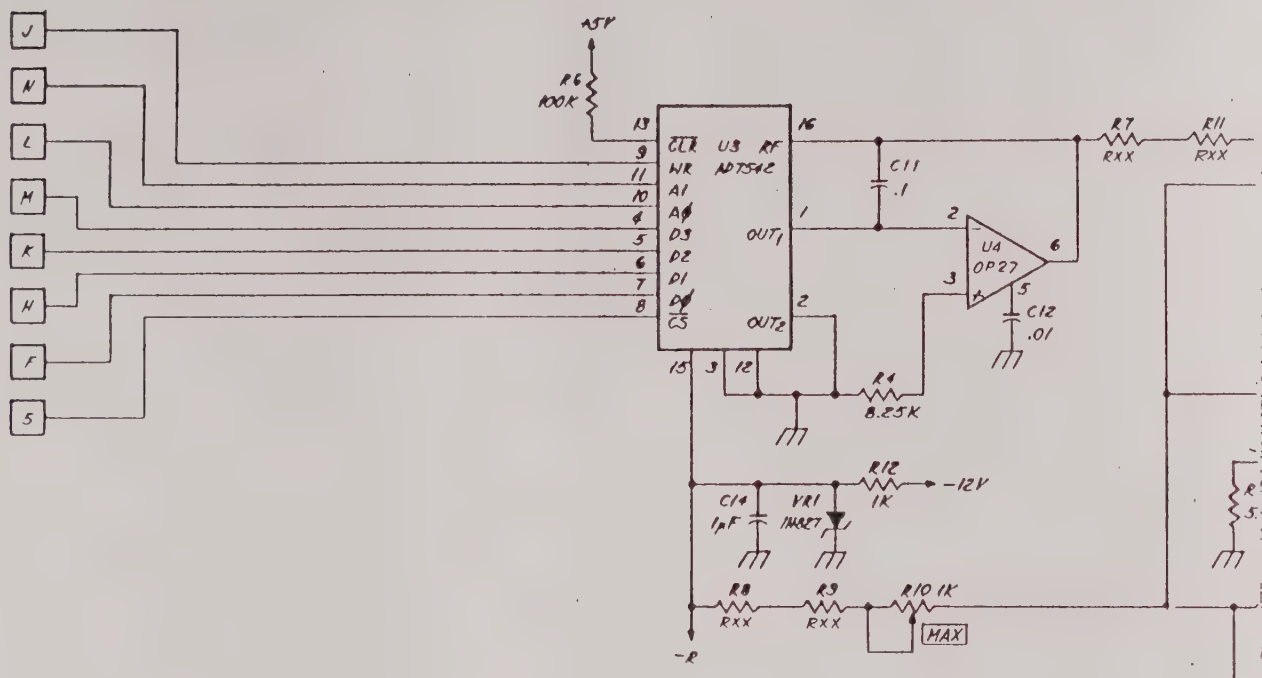

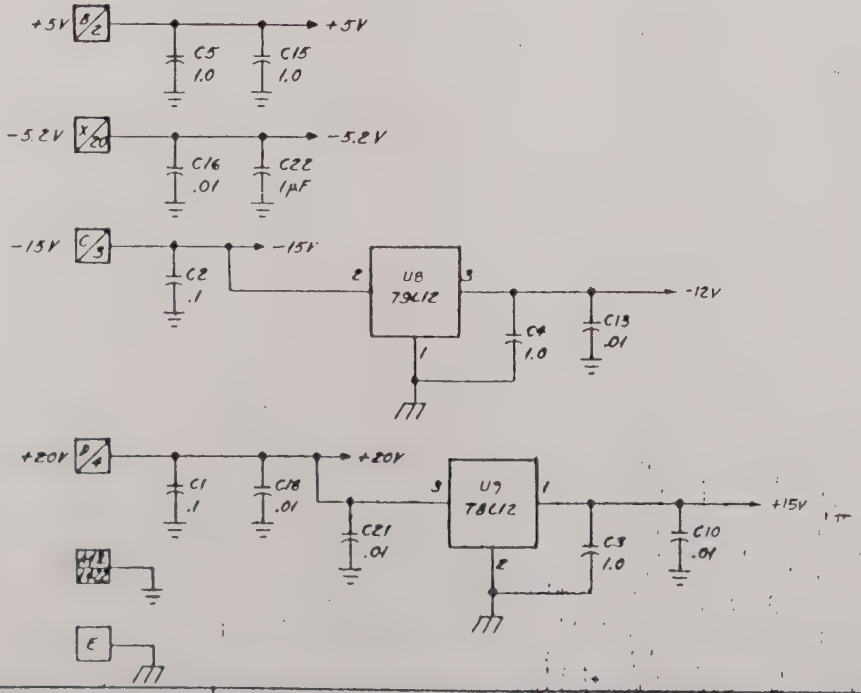

IC #	TYPE	PIN # -12V	PIN # -5V	PIN # +5V	PIN # +15
U4	OP 27	4	—	--	7
U3	AD7542	—	—	14	—
U6	OP 27	—	4	—	--
U7	TL072	—	4	—	—

REVISIONS					
ZONE	REV.	DESCRIPTION	ECO	DATE	APPV
	C	RELEASED [illegible]		11-85	BJ
	D	ADDED C23, VR2, R29	1173	12/85	BJ
	E	R18 WAS 100 Ω	1174	1-86	BJ

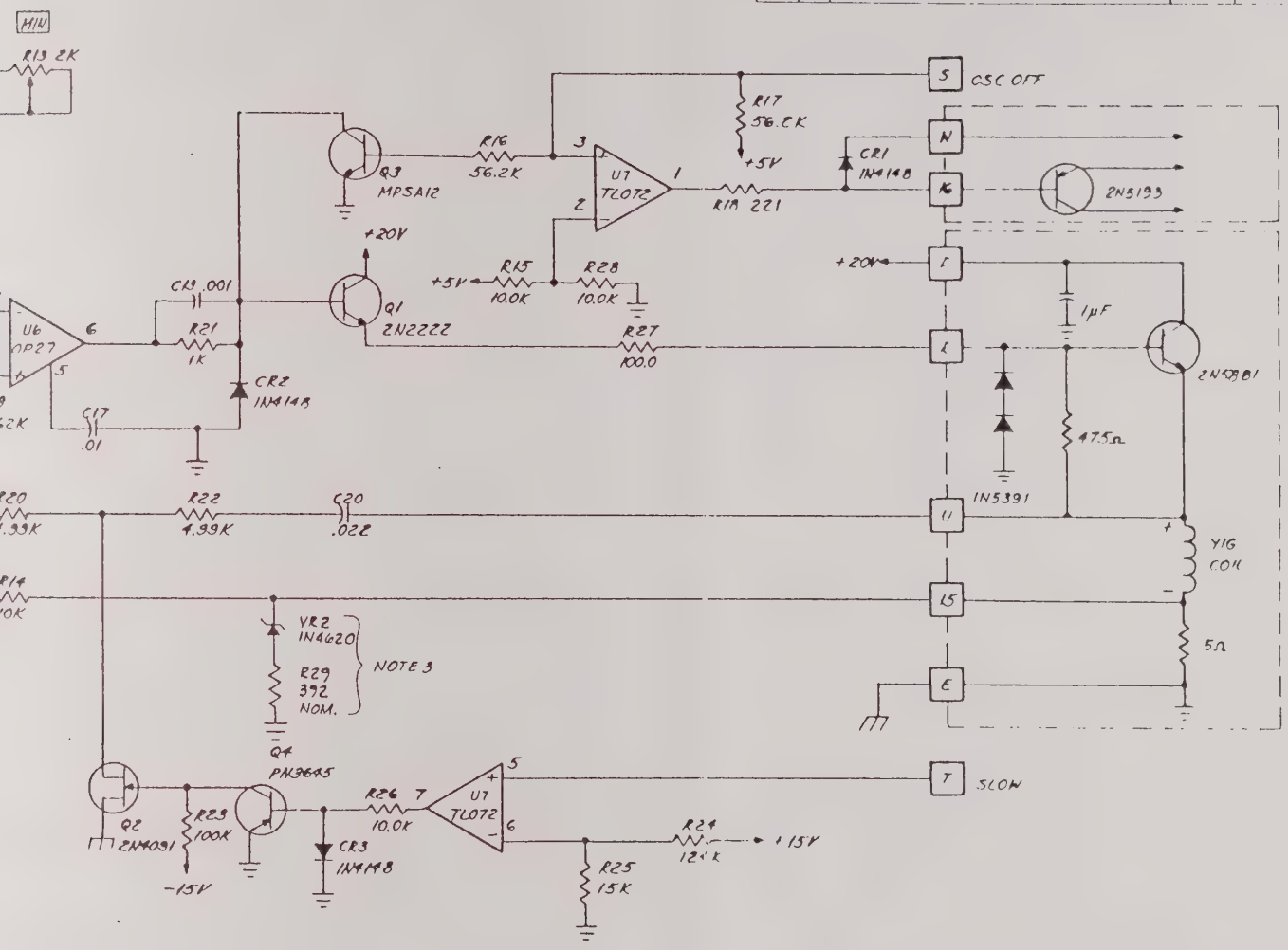

NOTES:
UNLESS NOTED OTHERWISE:
1) RESISTORS IN OHMS
2) CAPACITORS IN μF
3) VR2 / R29 TO BE USED ON A13 IN UNITS WHICH GO TO 26GHz ONLY

PIN # +20V	PIN # GND
—	—
—	—
7	—
8	—

NOMINAL RESISTOR VALUES					
BD. NO.	REF.	R7	R8	R9	R11
1018A28211	A13	16.9K	12.7K	1.82K	825
1018A28212	A11	26.7K	21.0K	1.0K	1.5K
1018A28213	A14	47.5K	16.9K	3.16K	1.82K
1018A28214	A12	26.7K	10K	2.21K	6.19K
1018A28215	A10	36.5K	12.7K	1.0K	2.74K

LAST USED	NOT USED
U9	U1,2,5
C23	C6,7,8,11
CR3	R1,2,3,5
VR2	
Q4	
R29	

QTY REQD	FSCM NO	PART OR IDENTIFYING NO.	NOMENCLATURE OR DESCRIPTION	MATERIAL SPECIFICATION
PARTS LIST				

UNLESS OTHERWISE SPECIFIED DIMENSIONS ARE IN INCHES
TOLERANCES ARE
FRACTIONS DECIMALS ANGLES
.XX ±
.XXX ±

MATERIAL
FINISH
NEXT ASSY | USED ON
APPLICATION
DO NOT SCALE DRAWING

CONTRACT NO

	APPROVALS	DATE
DRAWN	R. PERL	10/84
CHECKED	BH	11/85
ENG		
QA		

Gigatronics

YIG DRIVER

SIZE D | FSCM NO 58900 | DWG NO 1010528210 | REV E

SCALE | SHEET

C1
.1
C3
1.0
7812
IC3
7912
IC4
C2
.1
1.0
C5
1.0

DWG NO	SH	REV

REVISIONS

ZONE	REV	DESCRIPTION	ECO	DATE	APPV
	C	[illegible]		3/85	BJ
	D	ADDED C23	1173	12/85	BJ
	E	R18 WAS 100 Ω	1174	1-86	BJ
E1	R5 WAS 47.5K NOM	1210	7-86	BJ	

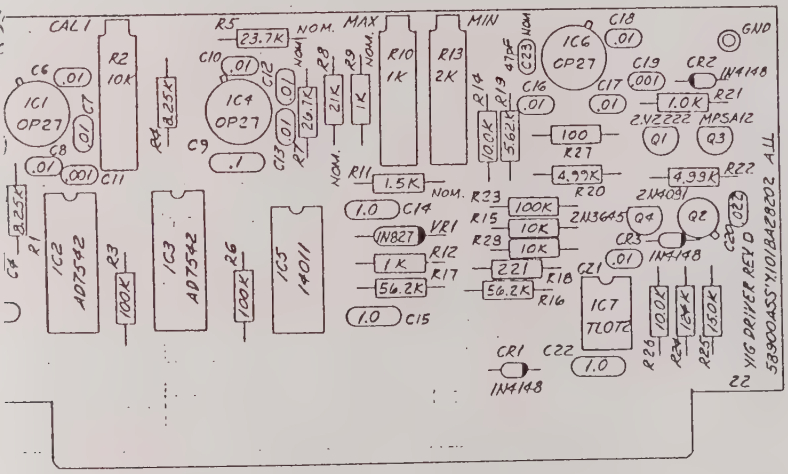

NOTES:
UNLESS NOTED OTHERWISE;
1) RESISTORS IN OHMS
2) CAPACITORS IN μF

QTY REQD	FSCM NO	PART OR IDENTIFYING NO	NOMENCLATURE OR DESCRIPTION	MATERIAL SPECIFICATION

PARTS LIST

	910
NEXT ASSY	USED ON
APPLICATION	

UNLESS OTHERWISE SPECIFIED DIMENSIONS ARE IN INCHES
TOLERANCES ARE
FRACTIONS DECIMALS ANGLES
.XX ±
.XXX ±

MATERIAL

FINISH

DO NOT SCALE DRAWING

CONTRACT NO

APPROVALS	DATE
DRAWN R. PERL	12/84
CHECKED	
ENG LAK	3/85
QA	

Giga-tronics

YIG DRIVER A11
2-8 GHz

SIZE	FSCM NO	DWG NO	REV
B	58900	10/BA282C2	E1

SCALE

SHEET 1 of 1

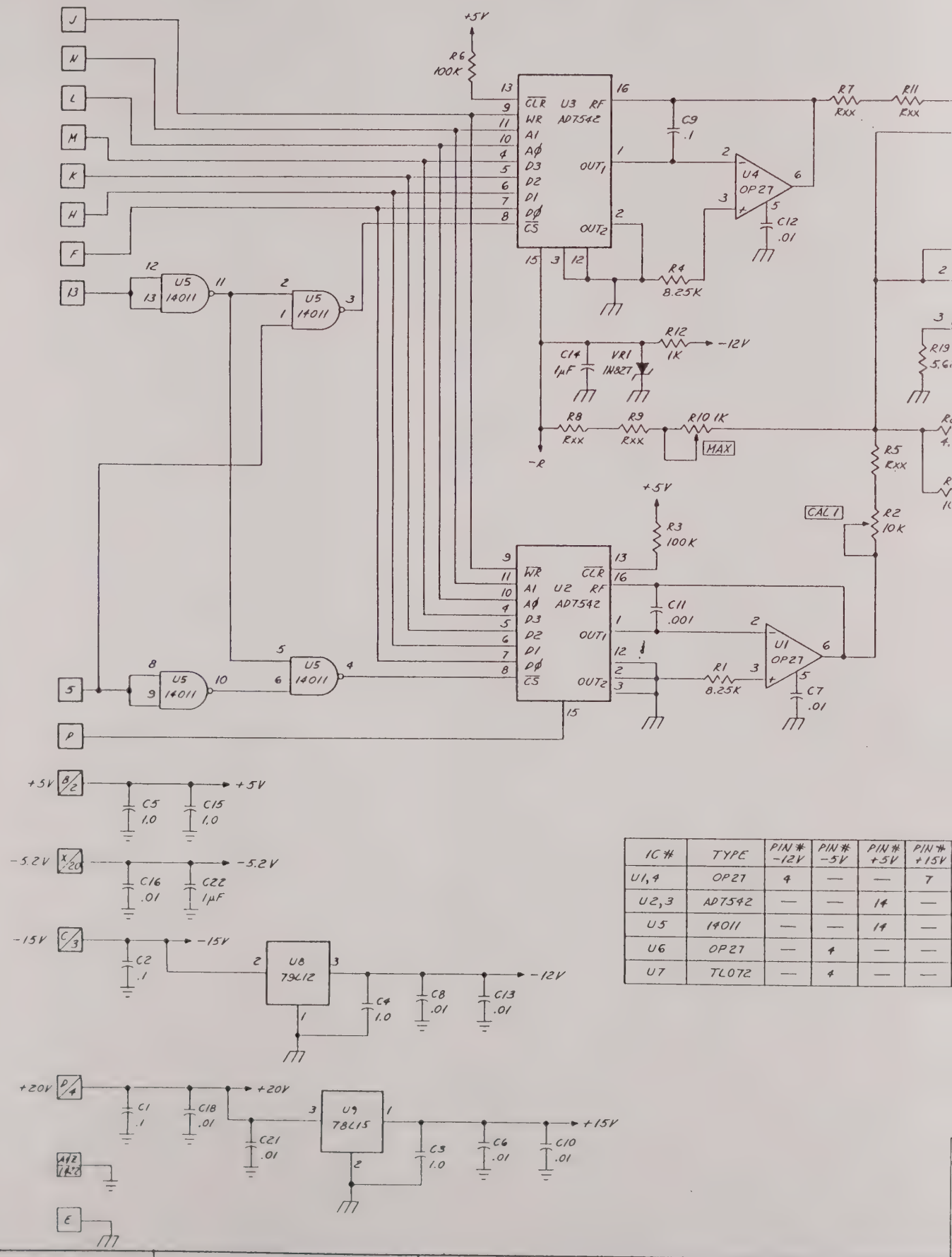

IC #	TYPE	PIN # -12V	PIN # -5V	PIN # +5V	PIN # +15V
U1,4	OP27	4	—	—	7
U2,3	AD7542	—	—	14	—
U5	14011	—	—	14	—
U6	OP27	—	4	—	—
U7	TL072	—	4	—	—

REVISIONS					
ZONE	REV	DESCRIPTION	ECO	DATE	APPV
	C	REDRAWN		3/83	BJ
	D	ADDED C23, VR2, R29	1173	12/85	BJ
	E	R18 WAS 100 Ω	1174	1-86	BJ
	E1	CHANGE NOM. VALUES OF R5	1210	7-86	BJ

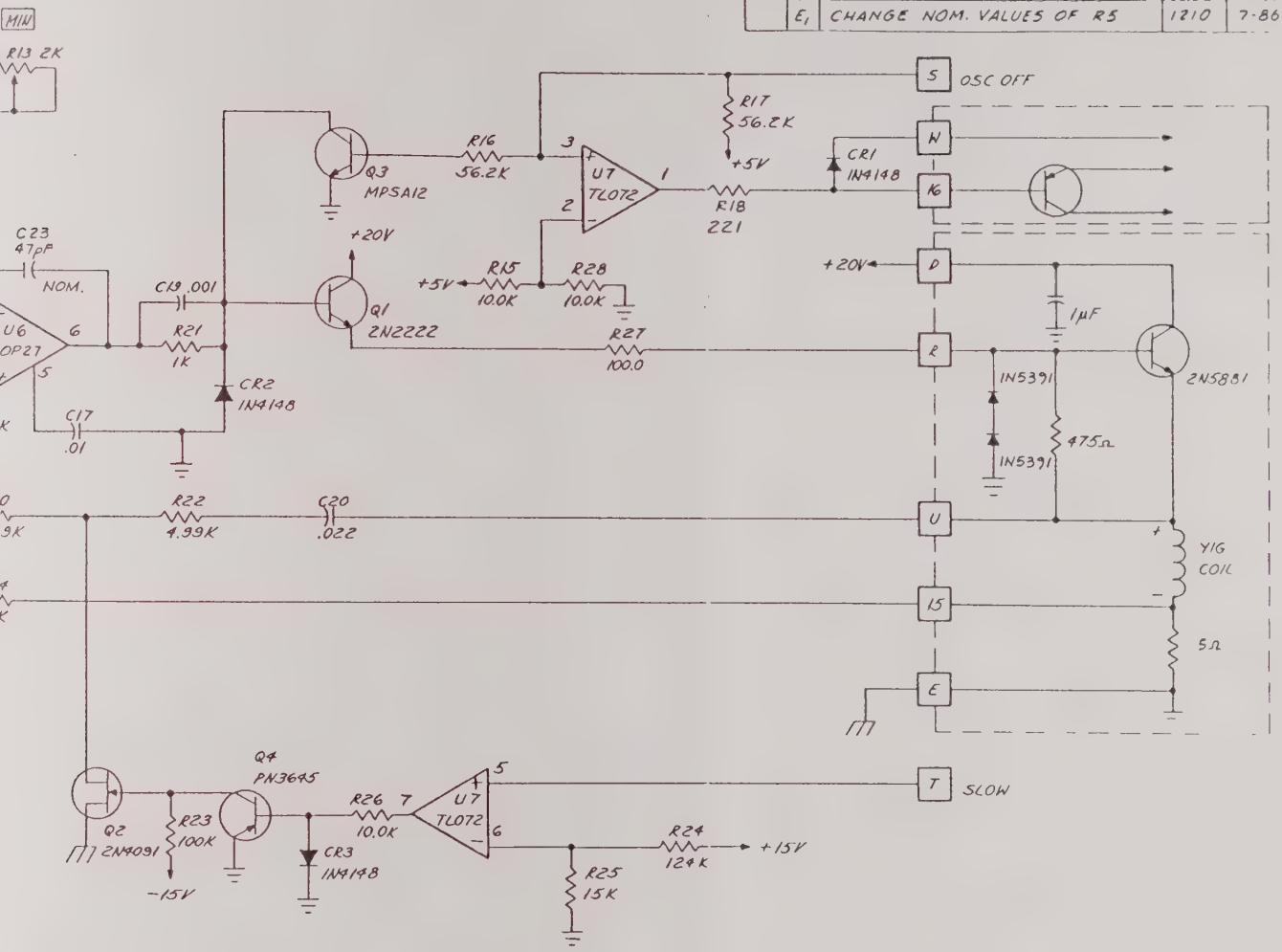

NOTES:
UNLESS NOTED OTHERWISE:
1.) RESISTORS IN OHMS
2.) CAPACITORS IN μf

PIN # +20V	PIN # GND
—	—
—	—
—	7
7	—
8	—

NOMINAL RESISTOR VALUES						
BD. NO.	REF.	R5	R7	R8	R9	R11
101BA28202	A11	23.7K	26.7K	21K	1K	1.5K
101BA28203	A14	35.7K	47.5K	16.9K	3.16K	1.82K
101BA28204	A12	34.0K	26.7K	10K	2.21K	6.19K
101BA28205	A10	4.75K	36.5K	12.7K	1K	2.74K

LAST USED	NOT USED
U9	R29
C23	
CR3	
VR2	
Q4	

	910
NEXT ASSY	USED ON
APPLICATION	

QTY REQD	FSCM NO	PART OR IDENTIFYING NO	NOMENCLATURE OR DESCRIPTION	MATERIAL SPECIFICATION
			PARTS LIST	

UNLESS OTHERWISE SPECIFIED DIMENSIONS ARE IN INCHES
TOLERANCES ARE
FRACTIONS DECIMALS ANGLES
.XX ±
.XXX ±

MATERIAL

FINISH

DO NOT SCALE DRAWING

CONTRACT NO

APPROVALS	DATE
DRAWN R. PERL	10/84
CHECKED	
ENG LAK	3/85
QA	

Giga-tronics

YIG DRIVER

SIZE	FSCM NO	DWG NO	REV
D	58900	101BA28200	E1

SCALE ~ SHEET 1 of 1

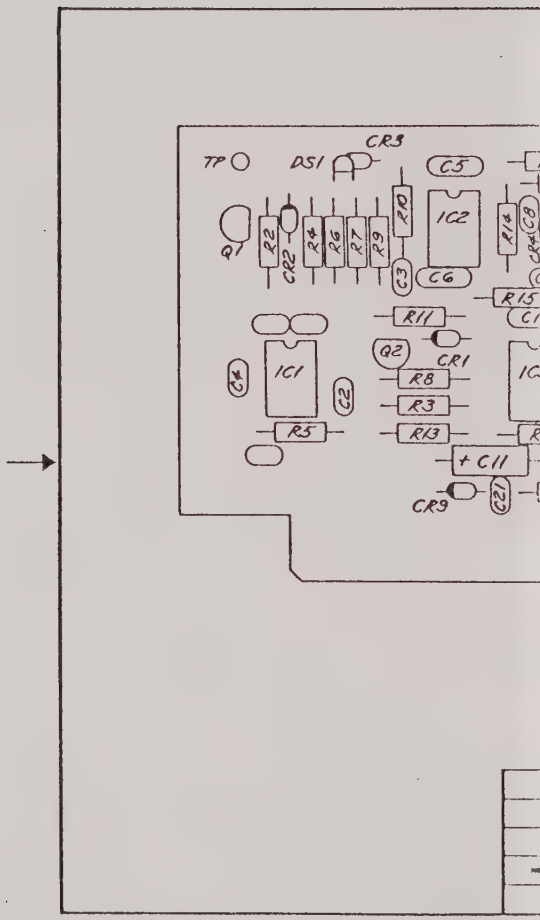
TP
DS1
CR3
C5
IC2
R10
R14
C8
Q1
R2
CR2
R4
R6
R7
R9
C3
C6
R15
R11
Q2
CR1
IC1
C4
C2
R8
R3
R13
R5
+ C11
CR9
C21

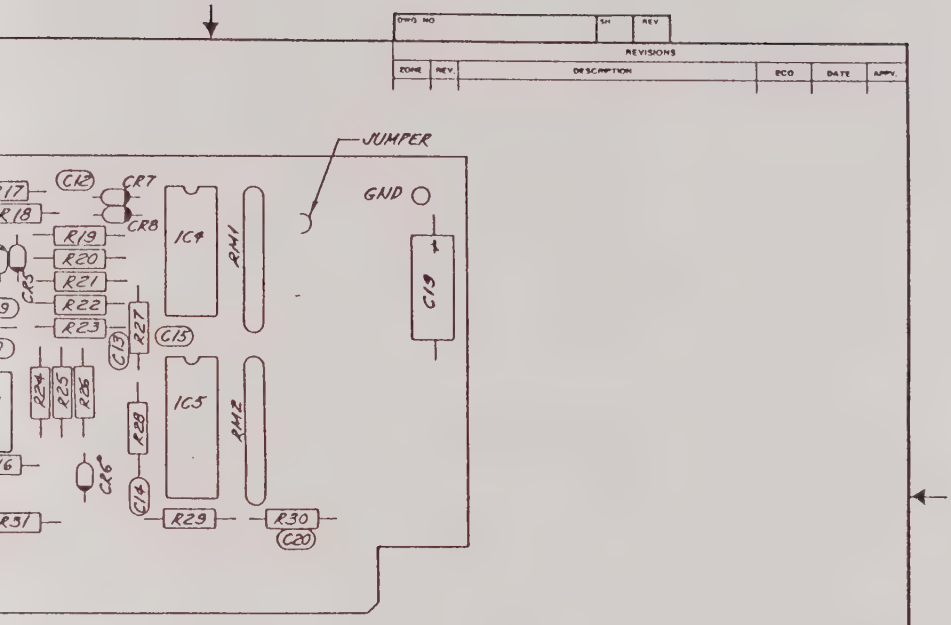

DWG NO	SH	REV

REVISIONS

ZONE	REV.	DESCRIPTION	ECO	DATE	APPV.

QTY PER UNIT	FSCM NO.	PART OR IDENTIFYING NO.	NOMENCLATURE OR DESCRIPTION	MATERIAL SPECIFICATION

PARTS LIST

UNLESS OTHERWISE SPECIFIED DIMENSIONS ARE IN INCHES
TOLERANCES ARE
FRACTIONS DECIMALS ANGLES
.XX ±
.XXX ±

MATERIAL

FINISH

DO NOT SCALE DRAWING

CONTRACT NO

APPROVALS	DATE
DRAWN R. PERL	5/23/84
CHECKED	
ENGR	
QA	

Giga-tronics

FIXED L.O. PHASE LOCK LOOP A15

SIZE	FSCM NO	DWG NO	REV
B	58900	105BA09200	A

SCALE 2:1 SHEET 1 of 2

NEXT ASSY	USED ON

APPLICATION

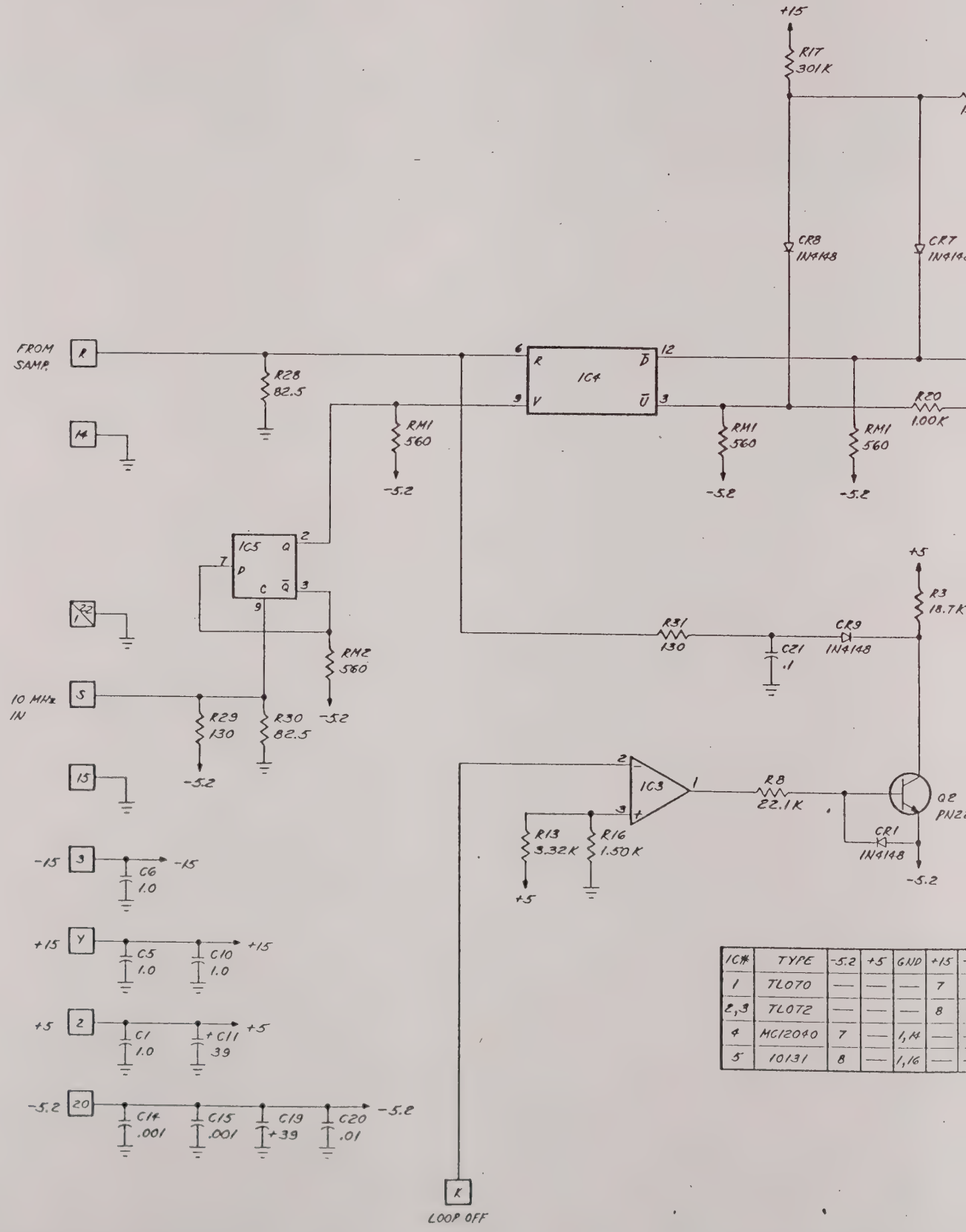

IC#	TYPE	-5.2	+5	GND	+15	
1	TL070	—	—	—	7	
2,3	TL072	—	—	—	8	
4	MC12040	7	—	1,14	—	
5	10131	8	—	1,16	—	

REVISIONS					
ZONE	REV.	DESCRIPTION	ECO	DATE	APPV

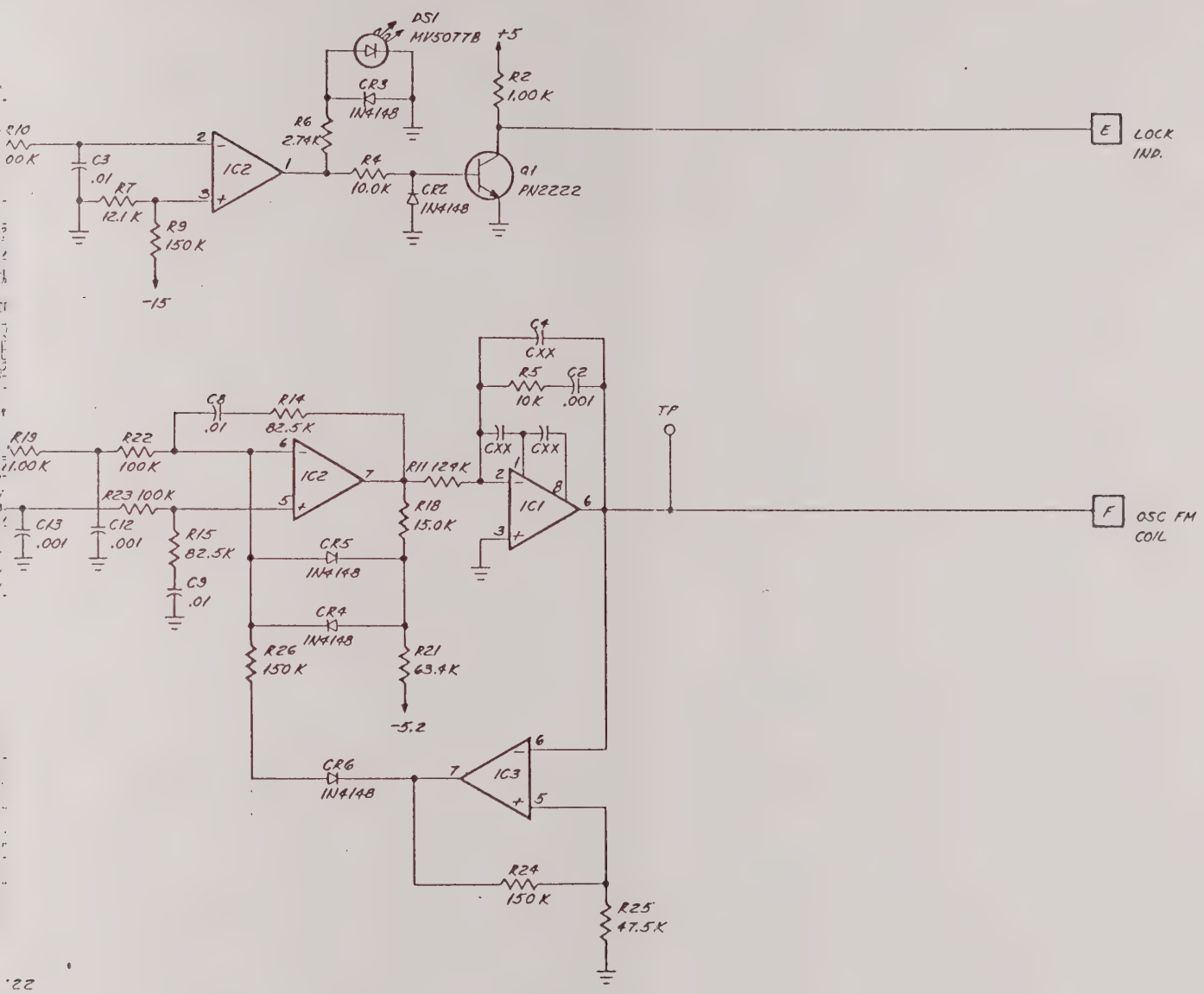

NOTES:
UNLESS OTHERWISE NOTED;
1.) RESISTORS IN OHMS
2.) CAPACITORS IN μF

QTY REQD	FSCM NO.	PART OR IDENTIFYING NO	NOMENCLATURE OR DESCRIPTION	MATERIAL SPECIFICATION

PARTS LIST

UNLESS OTHERWISE SPECIFIED DIMENSIONS ARE IN INCHES
TOLERANCES ARE
FRACTIONS DECIMALS ANGLES
.XX ±
.XXX ±

CONTRACT NO.

APPROVALS	DATE
DRAWN R. PERL	5/24/84
CHECKED	
ENGL	
QA.	

MATERIAL

FINISH

NEXT ASSY | USED ON

APPLICATION

DO NOT SCALE DRAWING

Giga-tronics

FIXED L.O. PHASE LOCK LOOP

SIZE	FSCM NO	DWG NO	REV
D	58900	105D509200	A

SCALE ~ SHEET 1 of 1

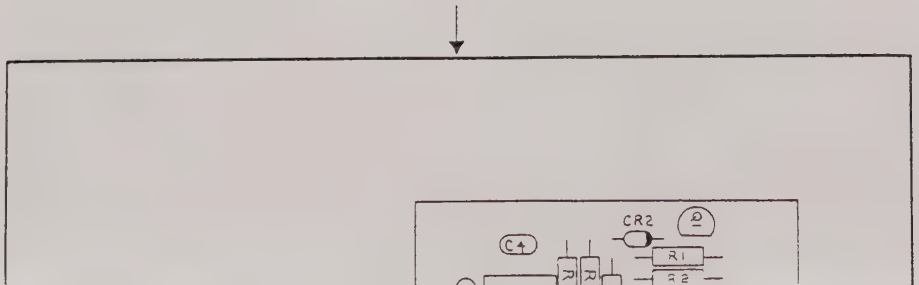
CR2
C4
R1
R2

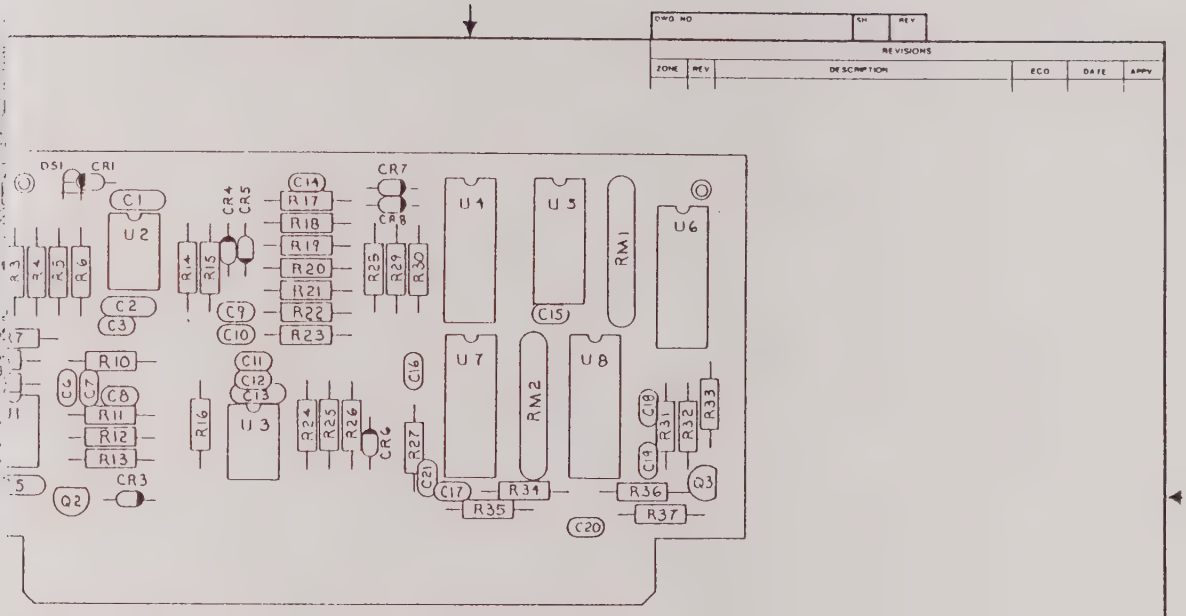

DWG NO	SH	REV

REVISIONS

ZONE	REV	DESCRIPTION	ECO	DATE	APPV

QTY REQD	FSCM NO	PART OR IDENTIFYING NO	NOMENCLATURE OR DESCRIPTION	MATERIAL SPECIFICATION

PARTS LIST

UNLESS OTHERWISE SPECIFIED DIMENSIONS ARE IN INCHES
TOLERANCES ARE
FRACTIONS DECIMALS ANGLES
.XX
.XXX

MATERIAL

FINISH

NEXT ASSY | USED ON

APPLICATION

DO NOT SCALE DRAWING

CONTRACT NO

	APPROVALS	DATE
DRAWN	KDN	9-86
CHECKED		
ENG	G.H.	1-87
QA		

Gigatronics

REFERENCE PHASE LOCK LOOP

SIZE	FSCM NO	DWG NO	REV
B	58900	1018A38800	A

SCALE 2:1 SHEET 1 of 2

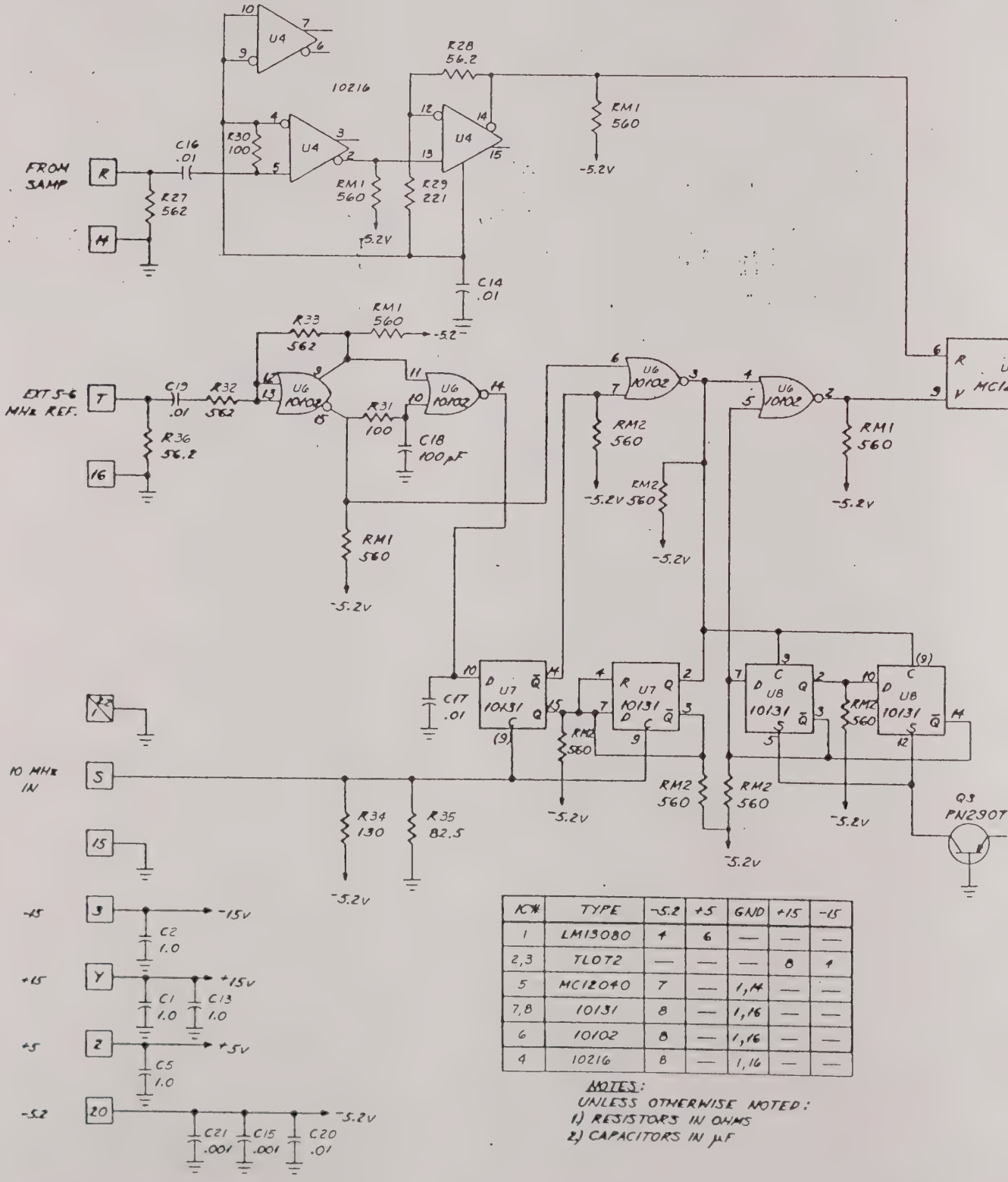

IC#	TYPE	-5.2	+5	GND	+15	-15
1	LM13080	4	6	—	—	—
2,3	TL072	—	—	—	8	4
5	MC12040	7	—	1,14	—	—
7,8	10131	8	—	1,16	—	—
6	10102	8	—	1,16	—	—
4	10216	8	—	1,16	—	—

NOTES:
UNLESS OTHERWISE NOTED:
1) RESISTORS IN OHMS
2) CAPACITORS IN μF

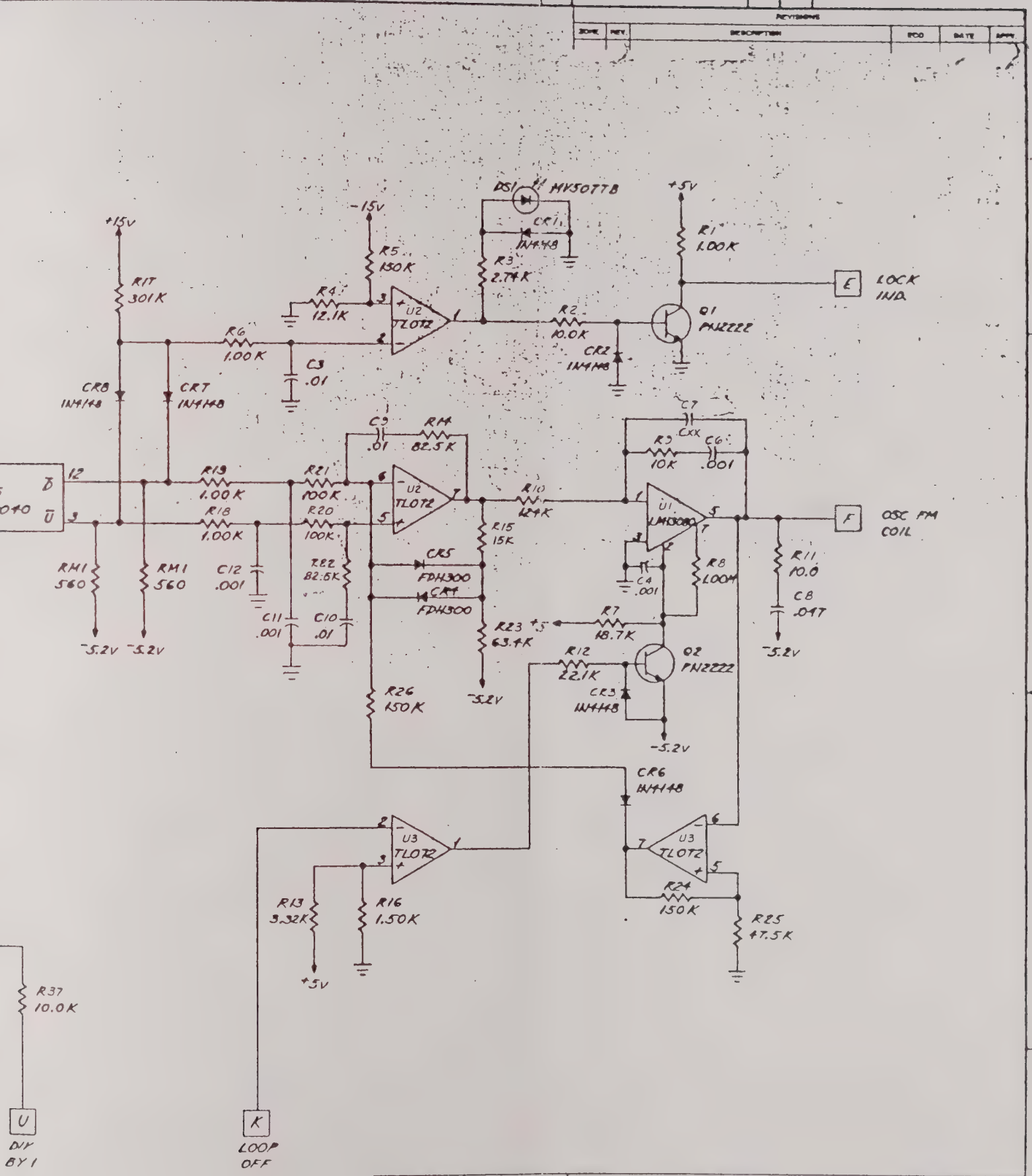

QTY REQD	FSCM NO	PART OR IDENTIFYING NO	NOMENCLATURE OR DESCRIPTION	MATERIAL SPECIFICATION

PARTS LIST

LAST USED		NOT USED
U8	RM2	
CR8	R37	
DS1		
Q3		
C21		

NEXT ASSY | USED ON

APPLICATION

UNLESS OTHERWISE SPECIFIED DIMENSIONS ARE IN INCHES TOLERANCES ARE FRACTIONS DECIMALS ANGLES XX XXX

MATERIAL

FINISH

DO NOT SCALE DRAWING

CONTRACT NO

APPROVALS	DATE
DRAWN Sn	1/87
CHECKED	
ENG. G H	1/87
QA	

Giga-tronics

REFERENCE PHASE LOCK LOOP

SIZE	FSCM NO	DWG NO	REV
D	58900	101D338800	A

SCALE ~ SHEET 1 of 1

USED ONLY IN INSTRUMENTS
WITH 18-26 GHz BAND

USED ONLY IN
INSTRUMENTS WITH
NO 18-26 GHz BAND

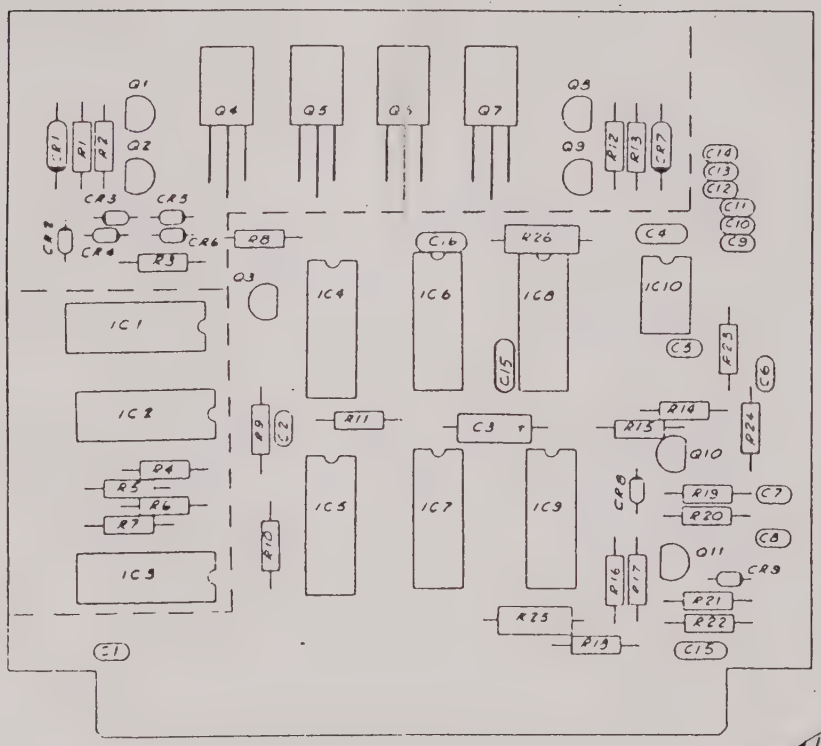

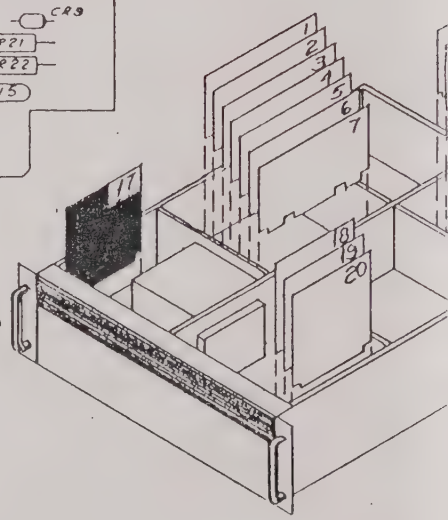

FIG: 7.A17.1
PULSE MODULATION PC ASSY (A17)
DWG# 101BM06600 SHT 1

REV G

PULSE MODULATION CONTROL--Circuit Board A17

GENERAL

This circuit produces signals to drive the PIN-diode modulators and to supply a synchronization output to the front panel. The modulation signal can be based on an external input or on internally generated waveforms. The board also includes a circuit that is used to drive the step-attenuator.

VARIABLE RATE GENERATOR

IC10 is a timer, configured as an astable multivibrator. Its frequency of oscillation is determined by the RC network consisting of C9 through C14, R14, R23, and the front panel "RATE" potentiometer. When the "X10" button is pushed, C9 through C11 are switched out of the RC network, reducing capacitance by a factor of 10 and increasing the frequency of oscillation by the same factor. Further variation is possible by adjusting the "RATE" potentiometer. The multivibrator has a range of 200 Hz to 100 kHz; its output is later divided by two to obtain the desired modulation range of 100 Hz to 50 kHz. In practice, this breaks down into two ranges; the standard range of 100 Hz to 5 kHz, and the "X10" range of 1 kHz to 50 kHz.

FIXED 1 kHz RATE

A 10 MHz, ECL-level signal is received at pin J and is converted by transistor Q3 to TTL levels. The divider chain IC4/IC5 uses this input to derive two frequencies for use by independent portions of the circuit. The 1 MHz signal (at IC4-7) is used to generate fixed-width 1-microsecond pulses; the 2 kHz signal (at IC5-9) is used to generate a fixed-rate 1 kHz waveform (after a further division by two, at IC5-13). Control line VAR/1 kHz (received at pin M) enables the tri-state buffer IC7-13, in order to select a variable rate generated by the timer IC10, or buffer IC7-10, in order to select a fixed 2 kHz rate generated by IC5-9. Both waveforms are applied to IC5-15 and divided by two.

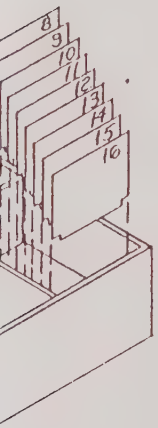

VARIABLE WIDTH PULSE GENERATOR

The waveform at IC5-13 is a square wave, and can be sent to the modulator in that form by enabling buffer IC7-4. However, it can also be used as a trigger to generate pulses having the same rate as the square wave, but a variable duty cycle. The falling edge of the square wave is differentiated by C6 and R21. This provides a brief negative pulse (through CR9) to the base of Q10, turning it off and allowing its collector to be pulled high by R15. This marks the beginning of the pulse. The base of Q11, no longer pulled low through CR8, assumes a positive voltage supplied through pin V and determined by the position of the "WIDTH" potentiometer. Q11 is now off, and will remain off until its emitter reaches a voltage sufficiently positive for forward-bias. When the timing circuit (C7, R19, R20) charges up to that value, Q11 turns on again, which also allows Q10 to turn on. The collector of Q10 is pulled low, terminating the pulse. The process repeats on the next falling edge received from IC5-13. The base threshold voltage, adjusted by means of the "WIDTH" potentiometer, determines the necessary charge-time and therefore the width of the pulse. This mode can be selected by enabling buffer IC-4.

FIXED-WIDTH 1 MICROSECOND PULSE GENERATOR

The square wave produced by IC5-13 can also be used as a trigger to generate pulses with a fixed width of one microsecond. The circuit consists of two D-type flip flops (IC6) and an exclusive-OR gate (IC8-6). The flip flops are cleared by each falling edge from IC5-13, and both inputs to the exclusive-OR gate go low. After the CLR inputs again go high, the Q outputs of both flip flops remain low until triggered by a rising edge received at their clock inputs. The clocks are triggered by the 1 MHz signal produced by the divider chain (IC4-7). The first flip flop, with its D input tied high, produces a high on its Q output at the first clock cycle. The second flip flop, with its D input tied to the Q output of the first flip flop, must wait for that output to propagate, and does not produce a high on its Q output until the second clock cycle. During this delay, the exclusive OR gate has unlike inputs and so produces a high output until the second clock cycle. Because the clock runs at 1 MHz, the clock cycles are one microsecond apart, and IC8-6 remains high for that duration. Another high pulse will be triggered by the next falling edge from IC5-13. This mode is selected by enabling buffer IC7-1.

EXTERNAL MODULATION

An input port for TTL-level modulation signals is provided on the front panel and is connected to pin 19; a rear-panel port is optionally available and connects to pin 18, but the two cannot be used simultaneously. Pulldown resistors hold the two inputs to the exclusive-OR gate IC8-3 to a low level unless an input high is received. Each high input pulse causes the gate to have unlike inputs and a high level is produced at the gate output (IC8-3). Each low input causes the gate to have like inputs and a low level is produced at the gate output. The contol line "VAR/1 kHz" is configured (during external modulation) to select the triggering of the external input. When this control line goes high, the exclusive-OR gate IC8-11 produces a high output at each falling edge of the input modulation signal. When the line goes low, the gate produces a high at each rising edge of the input modulation signal. This mode can be selected by enabling the buffer IC9-1.

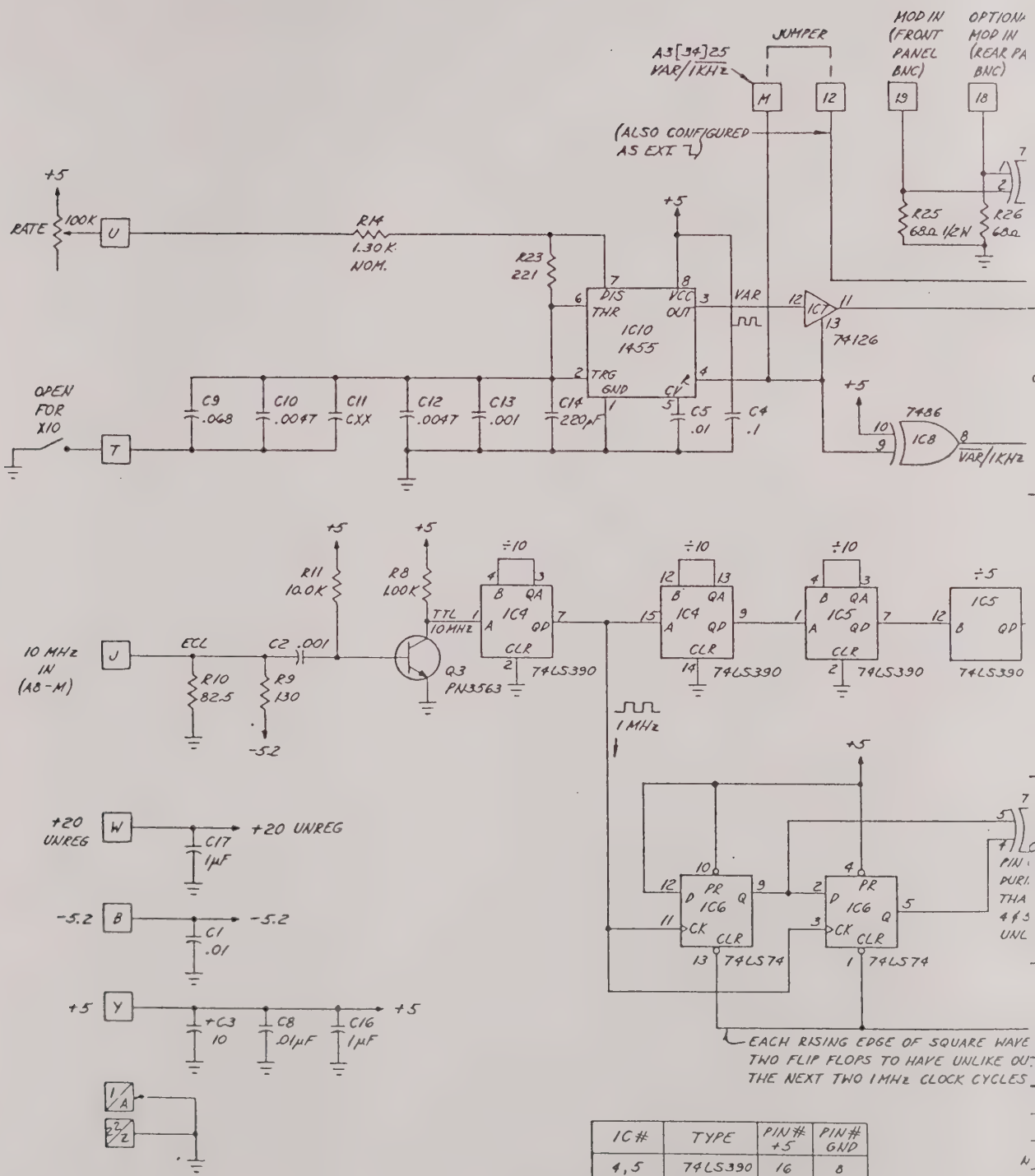

IC#	TYPE	PIN# +5	PIN# GND
4,5	74LS390	16	8
6	74LS74	14	7
8	7486	14	7
7,9	74LS126	14	7
10	1455	8	1

NOTES:
UNLESS NOTED OTHERWISE;
1) RESISTORS IN OHMS.
2) CAPACITORS IN μF

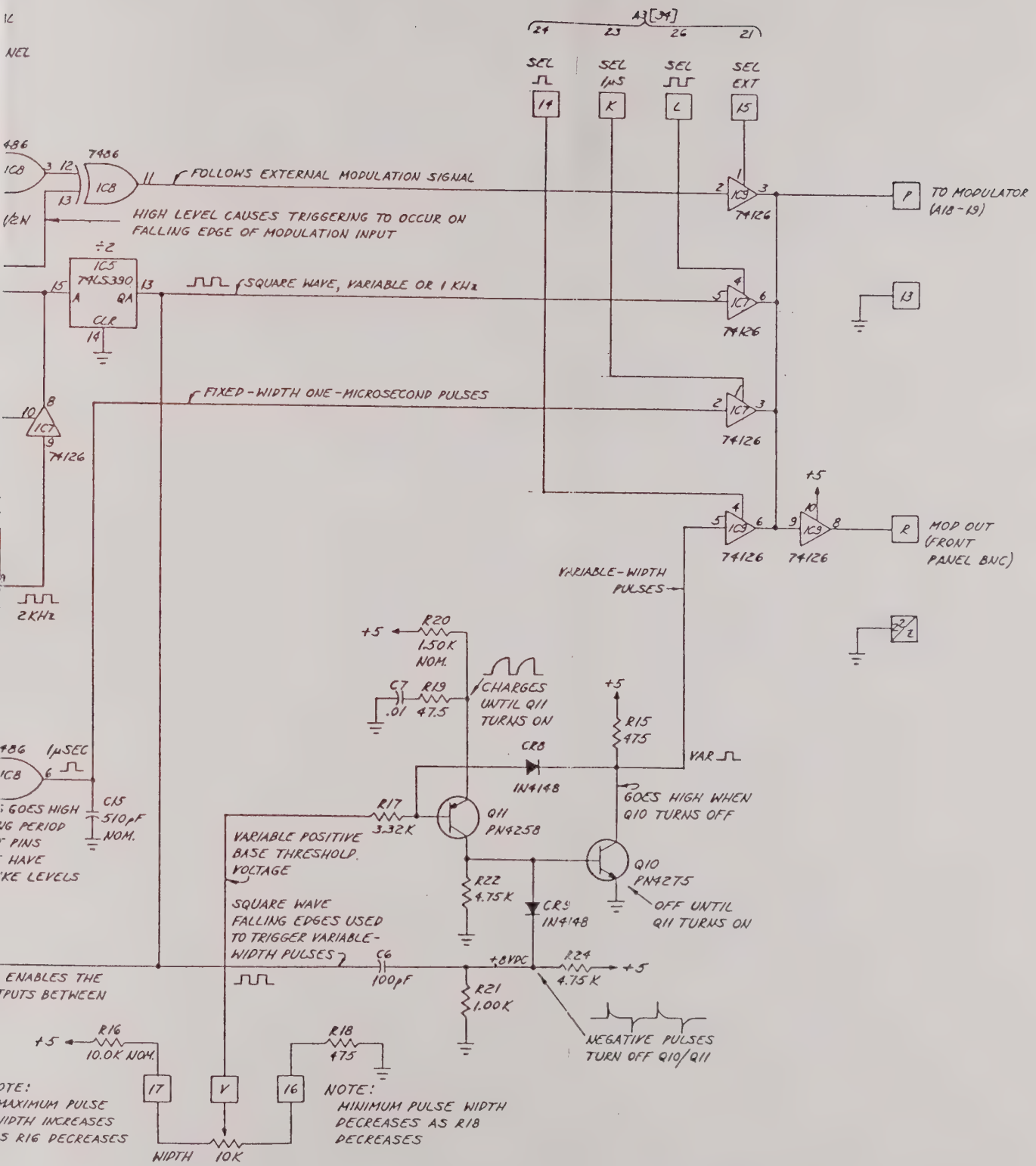

FIG: 7.A17.2
PULSE MODULATION PC ASSY (A17)
DWG# 101BM06600 SHT 2

REV G

NOTE:

This circuit board is used in different synthesizer models, including those models incorporating a frequency counter. The sharing of control lines between the attenuator and the counter, as described herein, is naturally not applicable to instruments that have no counter; nevertheless that control scheme is reflected in the circuit design, and is presented for the sake of clarity.

FIG: 7.A17.3
PULSE MODULATION PC ASSY (A17)
DWG# 101BM06600 SHT 3

REV G

MOTORIZED STEP-ATTENUATOR DRIVER

This circuit drives the DC motor of a ten-position rotary attenuator. Two outputs (at pins E and F) are connected to each side of the attenuator motor coil. Each output is driven by a network of four transistors, switching between a high of ∿+30V and a low of ∿0V. Both pins are held low when the motor is halted. Pin E goes high to increment the attenuator (step it toward a higher attenuation) while pin F remains low. Conversely, pin F goes high to decrement the attenuator while pin E remains low.

Switching is accomplished by sending a TTL high or low to the base resistors R1 and R13 (the logic level present at the base resistor is inverted at the driver output). These TTL signals are received at pins D and H. D goes low to increment the attenuator, and H goes low to decrement the attenuator. Both are high when the attenuator motor is halted.

The group of control lines at pins C,D,H,5, and 7 can be configured for two independent and mutually exclusive functions. When "MEAS" (pin C) goes high, these become frequency-counter control lines. (The titles assigned to these lines refer to the counter application and not to the attenuator application). Because the high at pin C is supplied to base resistors R1 and R13 (through diodes CR3 and CR5), the outputs at E and F are both held low and the attenuator motor is halted. This prevents frequency-counter commands from interfering with the attenuator. When "MEAS" goes low, the control lines are configured to control the attenuator. By supplying a low to pins D, H, or neither, the microprocessor control system causes the attenuator to increment, decrement, or halt.

It is necessary that the microprocessor be able to determine when the attenuator has reached the desired step, in order to halt it in that position. Therefore, the motor's position is read (using circuitry not included in this board) each time one of the ten available positions is reached. In order to detect the motor's arrival at a step, pins 7 and C are wired to each side of a mechanical switch within the attenuator motor. Because "MEAS" (pin C) goes low during attenuator-control use, a low is supplied (through the switch) to pin 7 each time the switch closes. Switch closure occurs whenever the motor reaches one of its discrete steps. The low signal returns through CR4 and pin 5 to the microprocessor control system, as an indicator that the motor has reached a step and that its position should be read.

Diodes CR2 through CR6 are needed to isolate the attenuator driver circuit from the control lines. When the lines are configured for counter control, the diodes prevent the high level then present at pin C from pulling D, H and 5 high and interfering with the operation of the counter. When the lines are configured for attenuator control, the diodes prevent high levels then present at D and H from pulling C high and interfering with the operation of the attenuator.

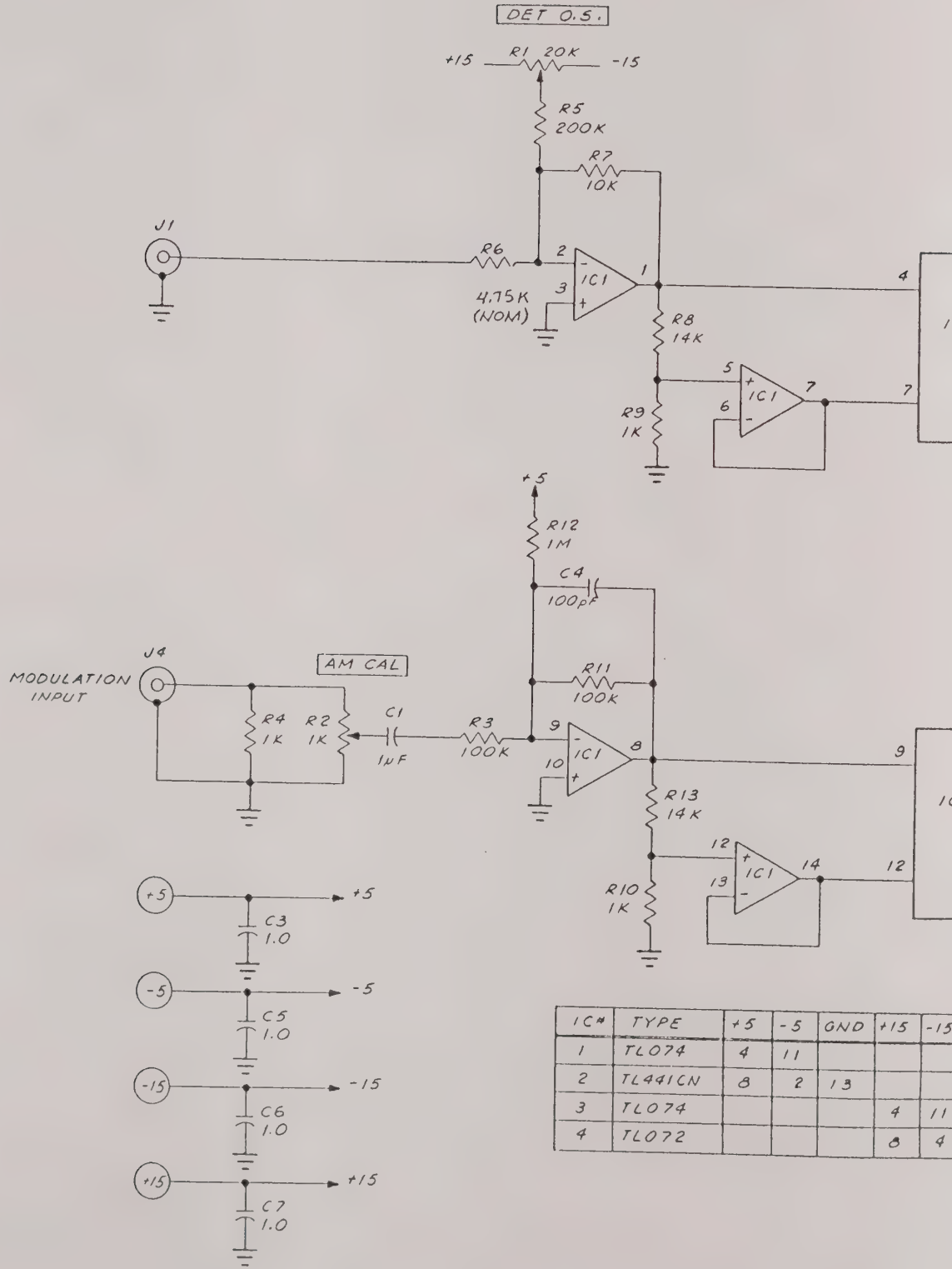

IC#	TYPE	+5	-5	GND	+15	-15
1	TL074	4	11			
2	TL441CN	8	2	13		
3	TL074				4	11
4	TL072				8	4

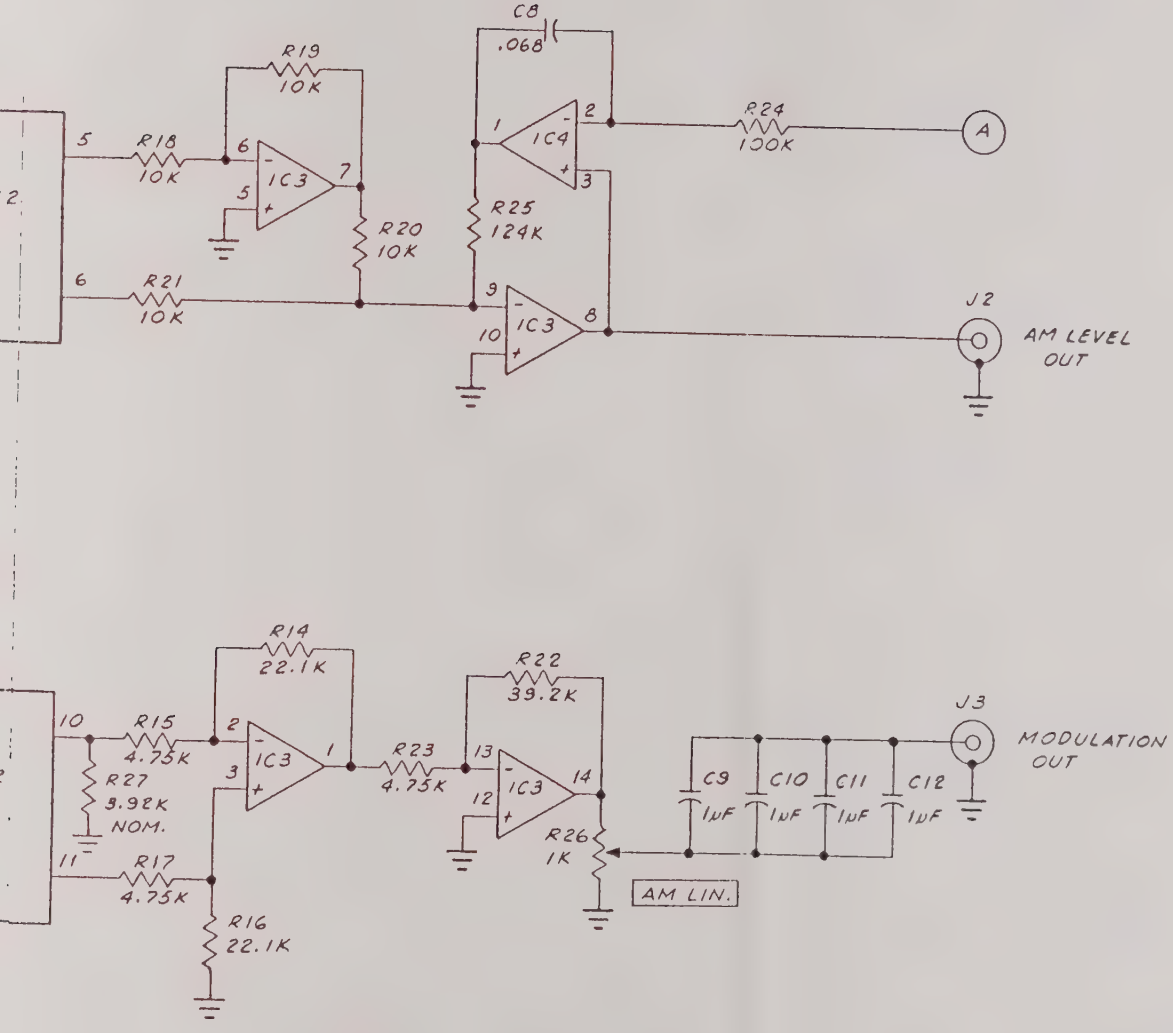

NOTES:

UNLESS NOTED OTHERWISE:
1. RESISTORS IN OHMS
2. CAPACITORS IN uF

FIG: 7.A113.2
AM MODULATOR PC ASSY (A113)
DWG# 101BM23300 SHT 2

REV D

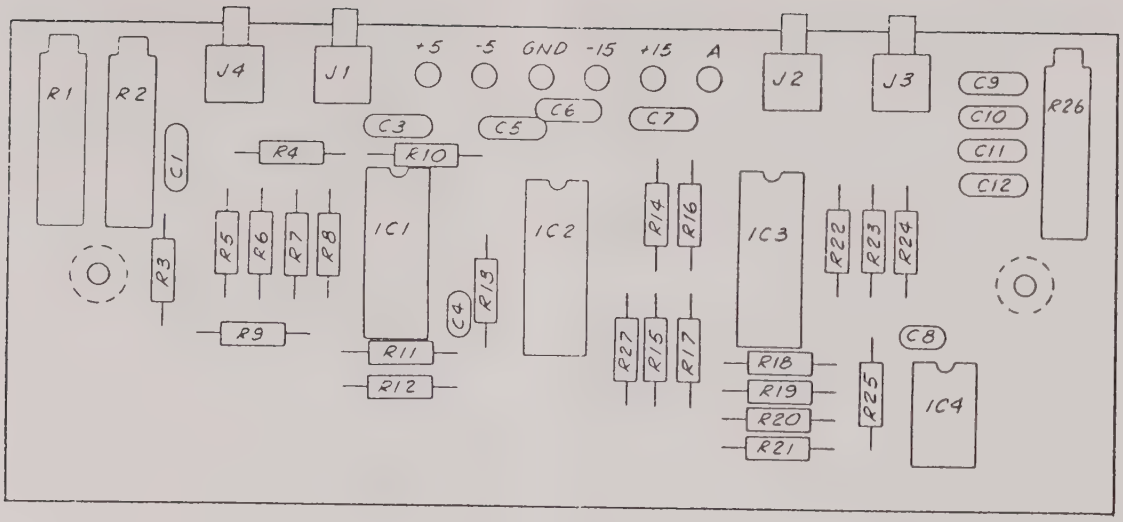

FIG: 7.A113.1
AM MODULATOR PC ASSY (A113)
DWG# 101BM23300 SHT 1

REV D

AM MODULATOR - Circuit Board A113

General

The AM Modulator provides for amplitude modulation of the RF output by a signal from an external source. There are three signal paths through the AM Modulator.

The DC Leveling Path

The output of the leveling log amp (A19) goes to "A" on the AM Modulator. IC3&4 act as a unity gain amplifier with its output at J2. From J2 the signal goes to J2, pin 30 on the AM Level Control board (A7).

The AC Leveling Path

The AC leveling path has much greater bandwidth than the DC leveling path. Its input at J1 (from pin M on the Leveling Log Amp - A19) is an amplified signal from the leveling detector.

The signal is inverted by one section of IC1. The output at IC1-1 drives IC2-4 (one of 4 log amps contained in IC2). IC1-1 is also divided down by resistors R8 and R9. The output of this divider is buffered by the unity gain section of IC1 which in turn drives IC2-7,, the 2nd log amp section of IC2.

The outputs of these log amps are combined and appear as a push-pull signal at IC2-5&6. The output at IC2-5 is inverted by one section of IC3. The two log amp outputs, now in phase, are amplified and go to the AM Modulator leveling output, J2.

The Modulation Signal Path

The AM input signal from the front panel enters the AM Modulator at J4. It passes through the AM Cal Pot to the unity gain inverting amplifier, IC2-8, -9 and -10. The output, IC1-8, drives the third log amp section of IC2. IC1-8 is divided down by resistors R10&R13. This divided signal is buffered by a unity gain section of IC1. The buffered output, IC1-14 drives the fourth log amp section of IC2. The third and fourth log amp outputs are combined and amplified in two sections of IC3. The output, IC3-14 passes through the AM Lin Pot and C9 to the output, J3. The output signal goes to J1, pin 17 on the AM Level Control board (A7).

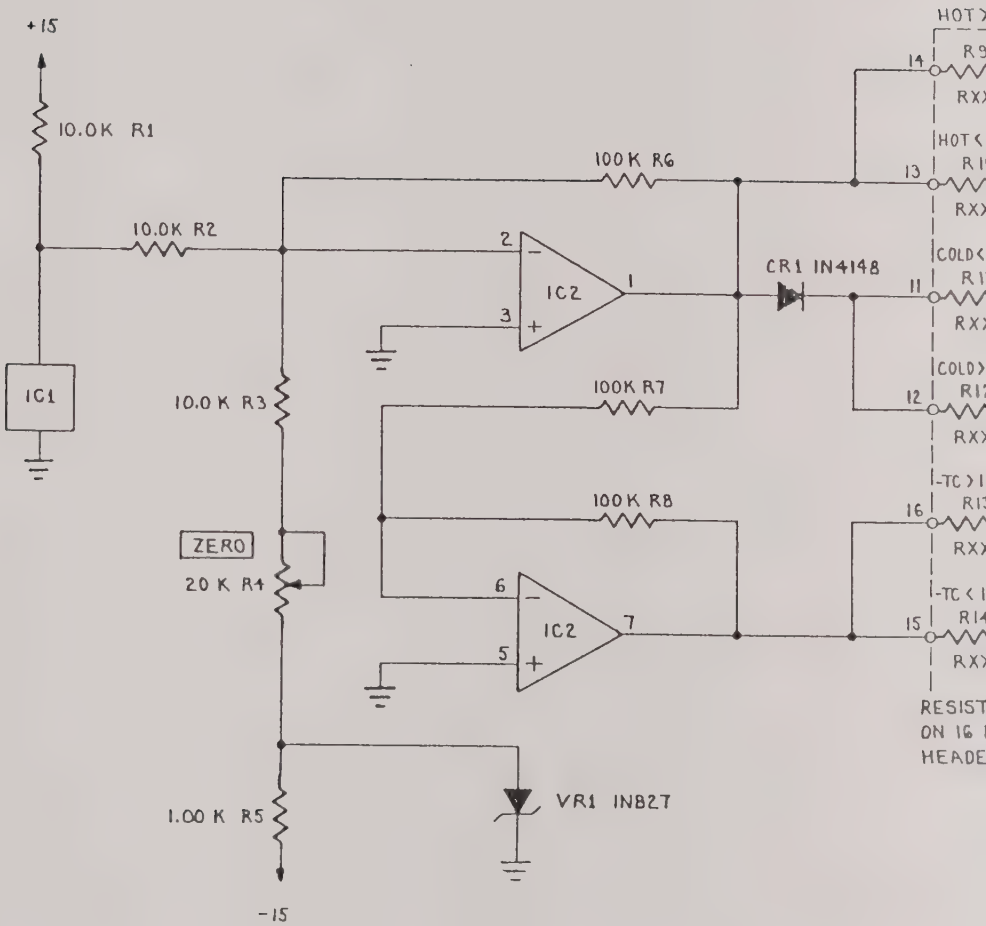

IC#	TYPE	+15V	-15V
IC1	LM335	—	—
IC2	TL072	8	4
IC3	IH5018	—	—

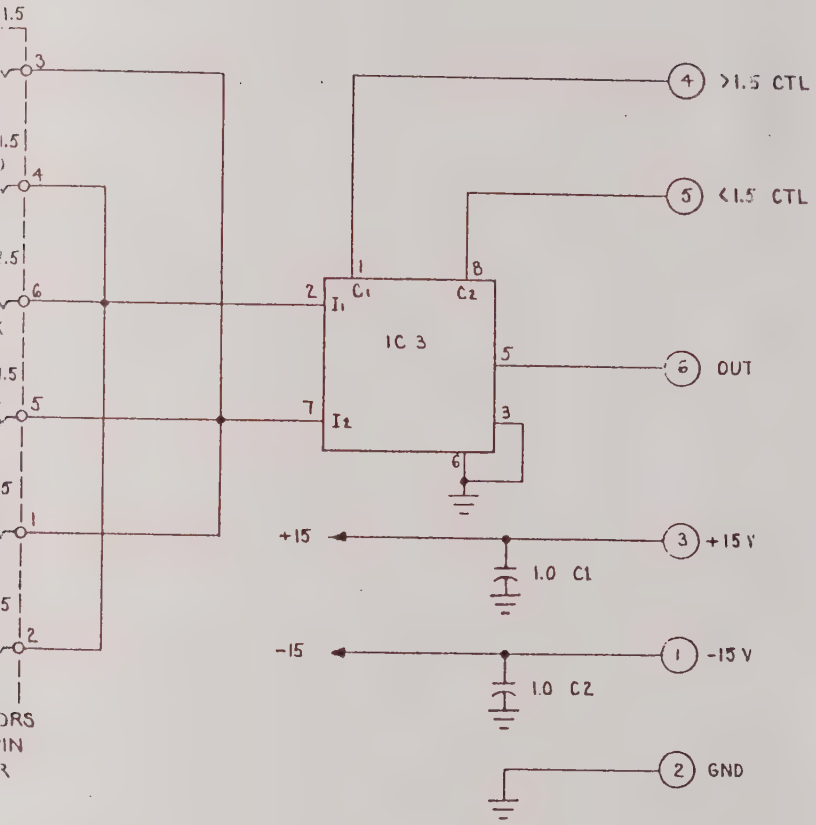

FIG: 7.A111.2
DETECTOR TEMP COMP PC ASSY (A111)
DWG# 101BM29400 SHT 2

REV A

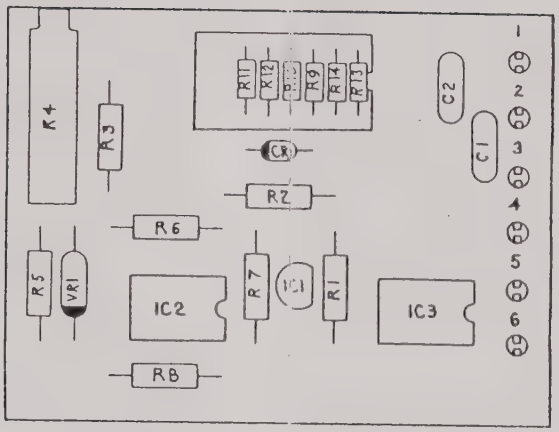

FIG: 7.A111.1
DETECTOR TEMP COMP PC ASSY (A111)
DWG# 101BM29400 SHT 1

REV A

DETECTOR TEMPERATURE COMPENSATION - A111

General

This circuit provides a correction voltage to compensate for variations in the levelling detector output due to temperature. The circuit provides independent correction for each of the detectors plus the ability to compensate for positive or negative coefficients.

The Correction System

A linear temperature sensor, IC1, provides a 10 mV/^{o}C output. This signal plus the "zero" adjustment from VR1 and R4 are amplified by IC2-1. The "zero" is set to give about 0.2V at IC2-1 at ambient. As the temperature decreases, the voltage at IC2-1 increases, turning on CR1. Thus a larger correction voltage is available below ambient to match the steeper detector T.C. curve.

The output from IC2-7 provides a reverse compensation, when needed. Switch IC3 allows different compensation values for each detector to be selected.

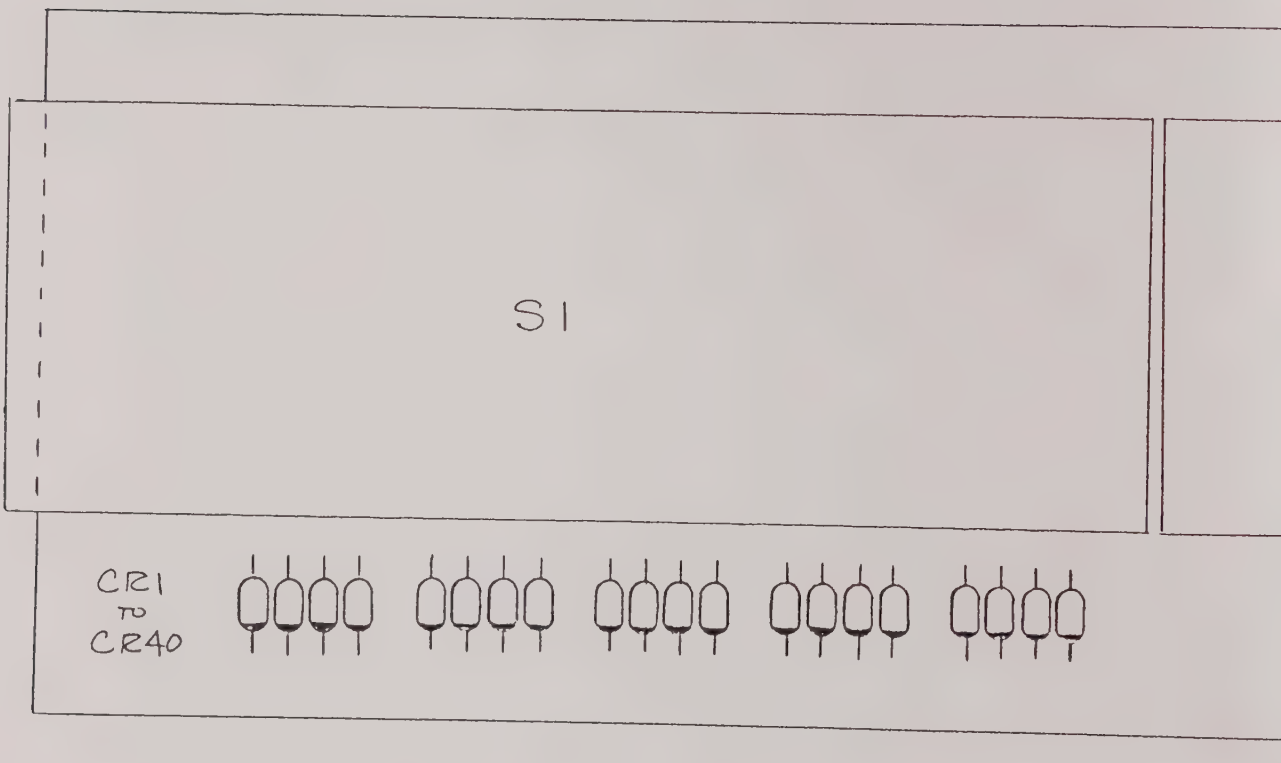
S1
CR1
TO
CR40

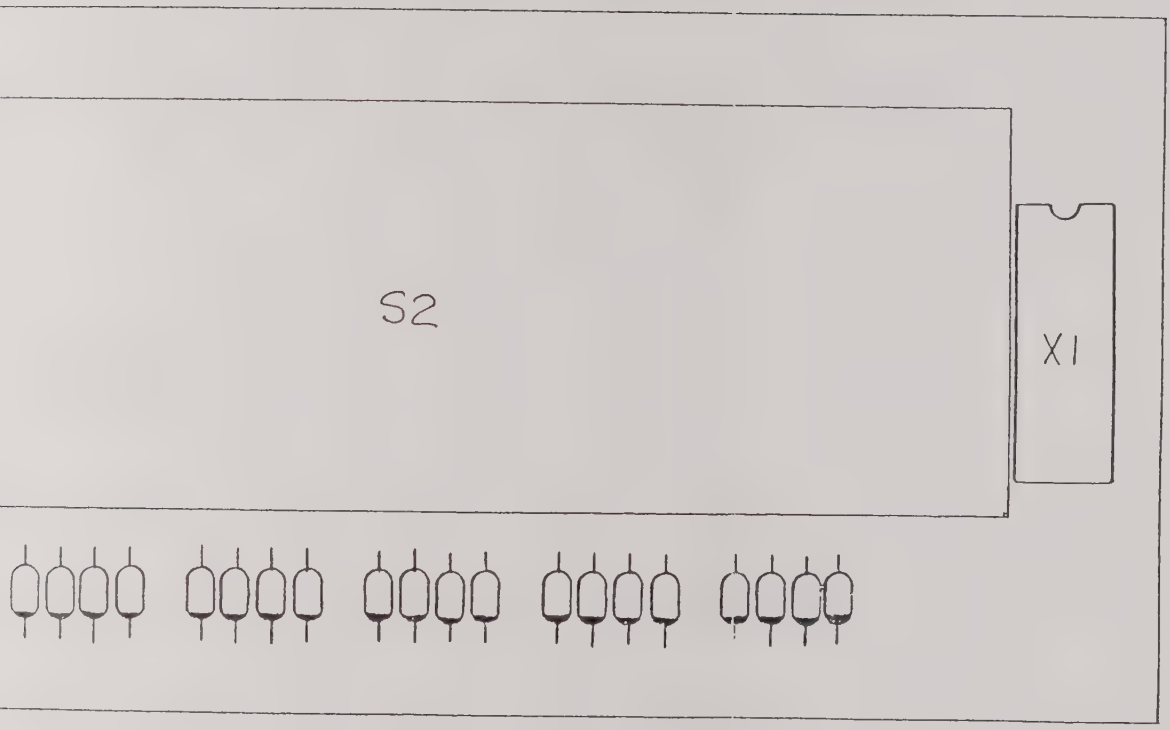

FIG: 7.A107.1
LEVER SWITCH PC ASSY (A107)
DWG# 101BM02700

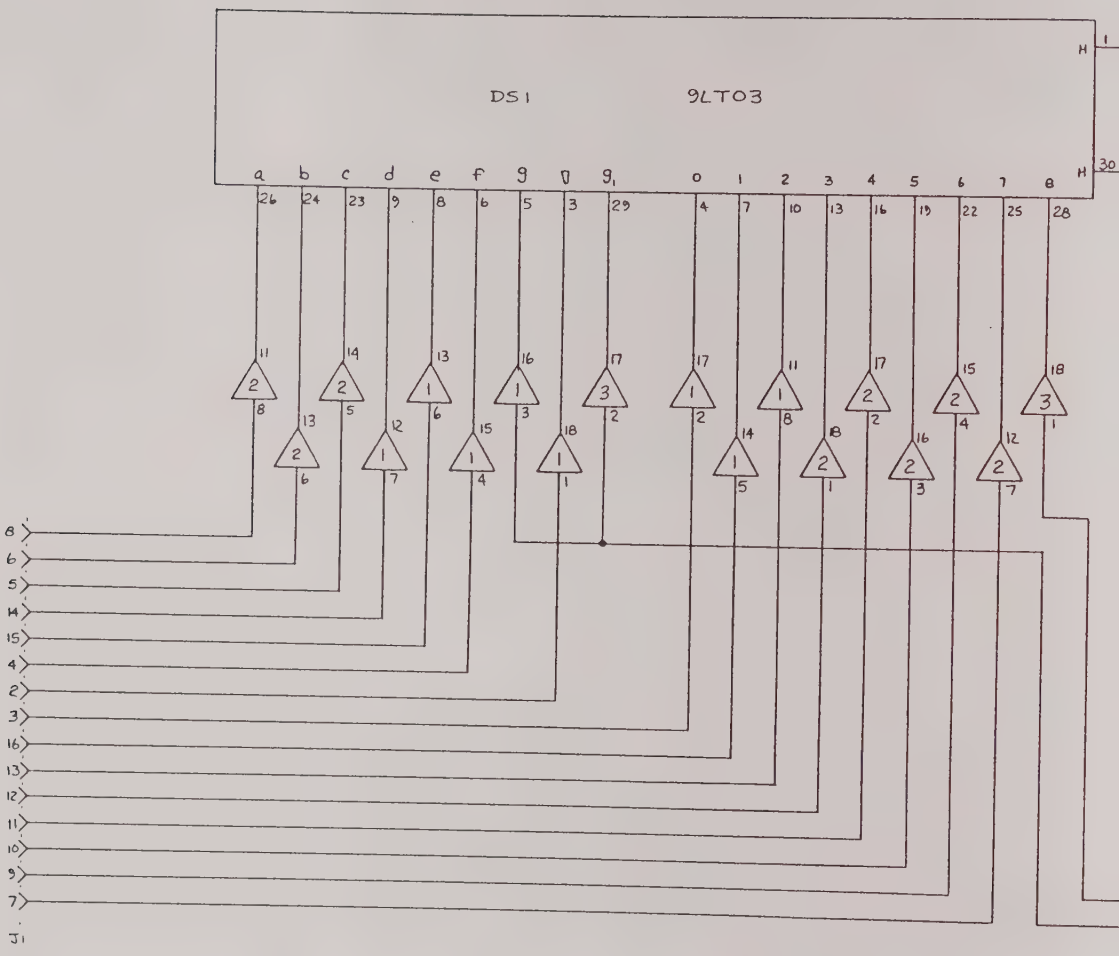

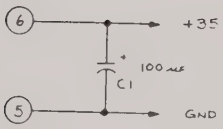

IC #	TYPE	PIN # +35	PIN # GND
1,2,3,4	XR6118	10	9

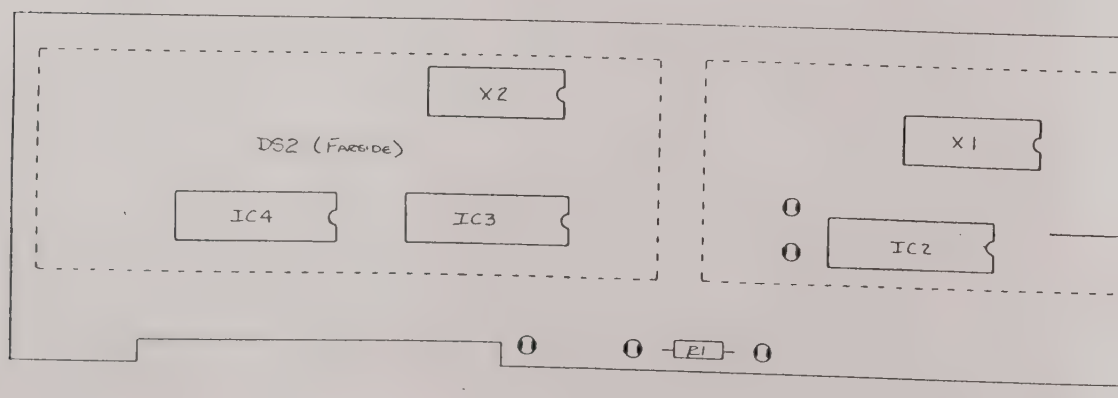

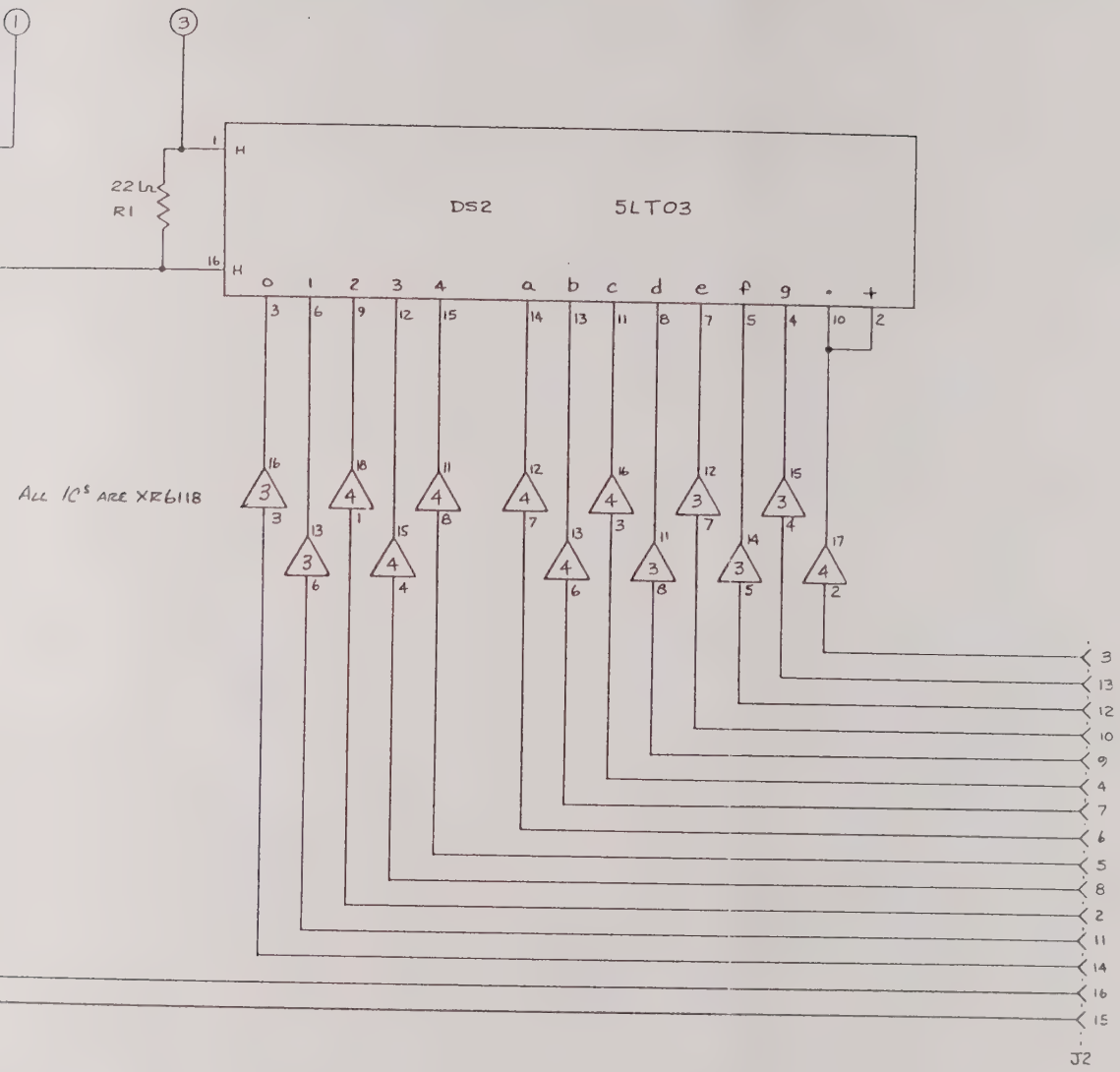

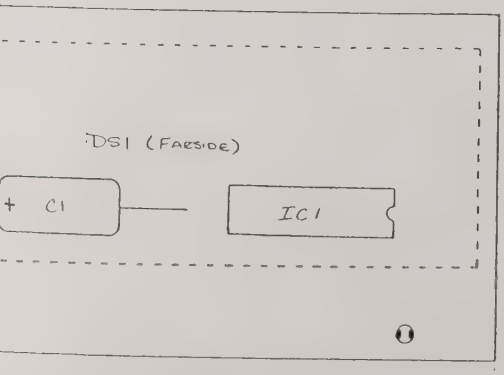

FIG: 7.A106.1
DISPLAY PC ASSY (A106)
DWG# 101BM03000

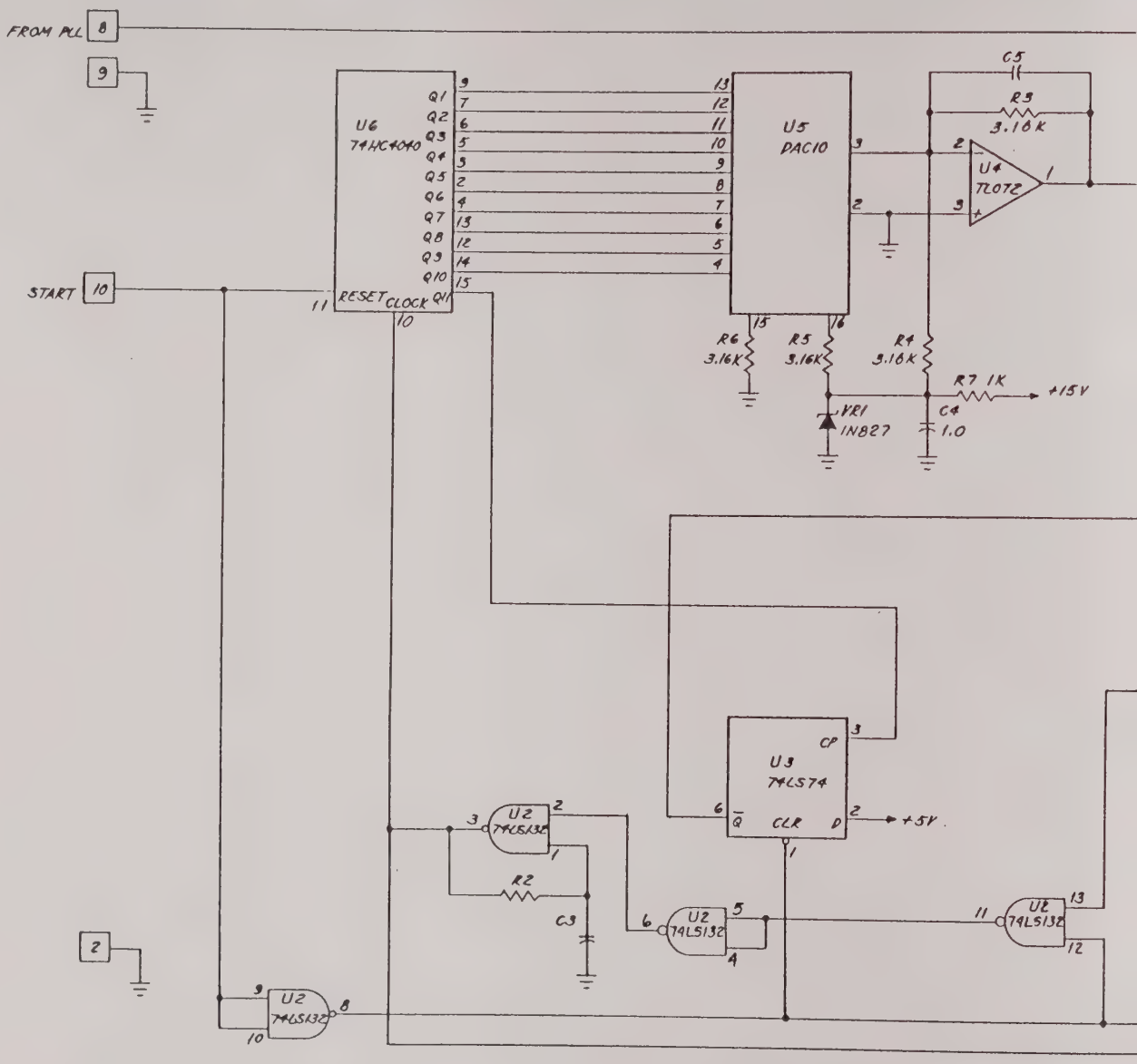

IC #	TYPE	PIN # -5V	PIN # +5V	PIN # -15V	PIN # +15V	PIN # GND
1	LM311	—	—	4	8	—
2	74LS132	—	14	—	—	7
3	74LS74	—	14	—	—	7
4	TL072	—	—	4	8	—
5	DAC10	—	14	1	—	—
6	74HC4040	—	16	—	—	8

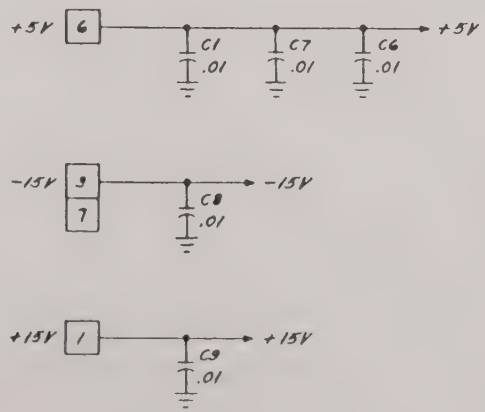

DWG NO SH REV

REVISIONS

ZONE	REV	DESCRIPTION	ECO	DATE	APPV
	A	RELEASED TO PRODUCTION		12-84	BJ
	B	ADD R7	1179	2-86	BJ
	C	CIRCUIT CHANGE	1188	3-86	BJ

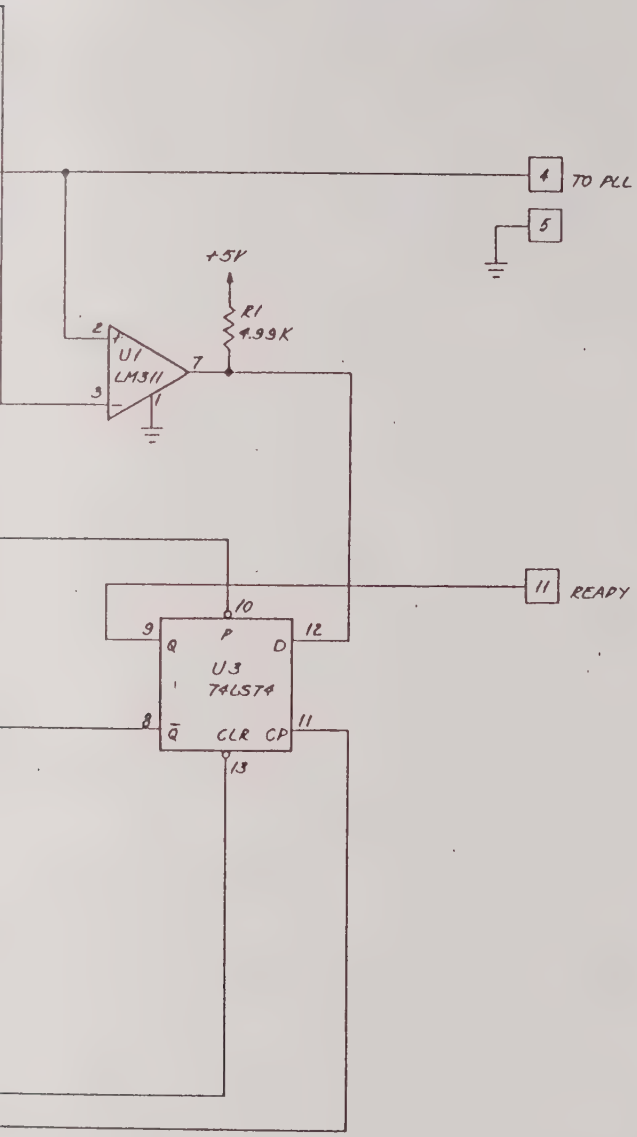

NOTES:
UNLESS NOTED OTHERWISE:

1) RESISTORS IN OHMS

2) CAPACITORS IN μF

QTY REQD	FSCM NO.	PART OR IDENTIFYING NO.	NOMENCLATURE OR DESCRIPTION	MATERIAL SPECIFICATION

PARTS LIST

UNLESS OTHERWISE SPECIFIED DIMENSIONS ARE IN INCHES
TOLERANCES ARE
FRACTIONS DECIMALS ANGLES
.XX ±
.XXX ±

CONTRACT NO.

MATERIAL

FINISH

DO NOT SCALE DRAWING

	APPROVALS	DATE
DRAWN	R. PERL	12/84
CHECKED		
ENG.	LAK	3/85
Q.A.		

Giga-tronics

ANALOG SWEEP START FREQUENCY HOLD

SIZE	FSCM NO	DWG NO	REV
D	58900	1060501800	C

SCALE ~ SHEET 1 OF 1

	910
NEXT ASSY	USED ON
APPLICATION	

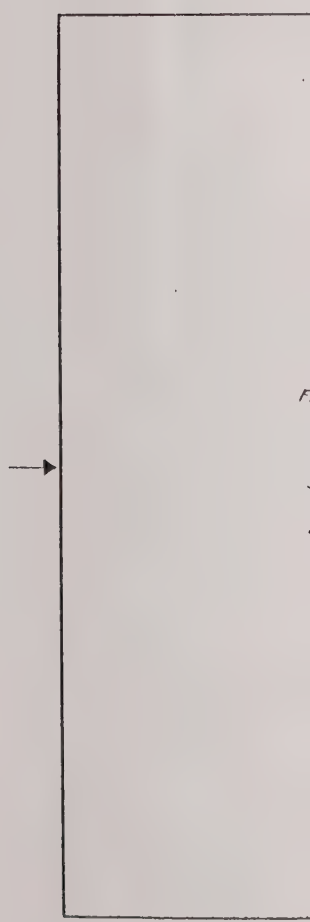

DWG NO	SH	REV

REVISIONS

ZONE	REV	DESCRIPTION	ECO	DATE	APPV
	A	[illegible]		12 84	BJ
	B	ADD R7	1179	2-86	BJ
	C	CIRCUIT CHANGE	1188	3-86	BJ

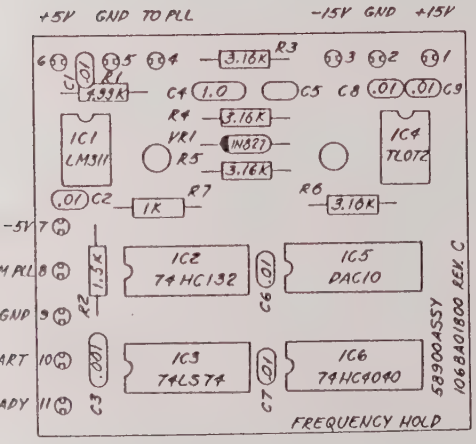

NOTES:
UNLESS NOTED OTHERWISE:

1.) RESISTORS IN OHMS

2.) CAPACITORS IN μF

QTY REQD	FSCM NO	PART OR IDENTIFYING NO	NOMENCLATURE OR DESCRIPTION	MATERIAL SPECIFICATION

PARTS LIST

	910
NEXT ASSY	USED ON
APPLICATION	

UNLESS OTHERWISE SPECIFIED DIMENSIONS ARE IN INCHES
TOLERANCES ARE
FRACTIONS DECIMALS ANGLES
XX
XXX

DO NOT SCALE DRAWING

CONTRACT NO

APPROVALS	DATE
DRAWN R. PERL	12/85
CHECKED	
ENG. LAK	1-85
QA	

MATERIAL

FINISH

Gigatronics

FREQUENCY HOLD

SIZE	FSCM NO	DWG NO	REV
B	58900	1068A01800	C

SCALE 2:1 SHEET 1 of 1

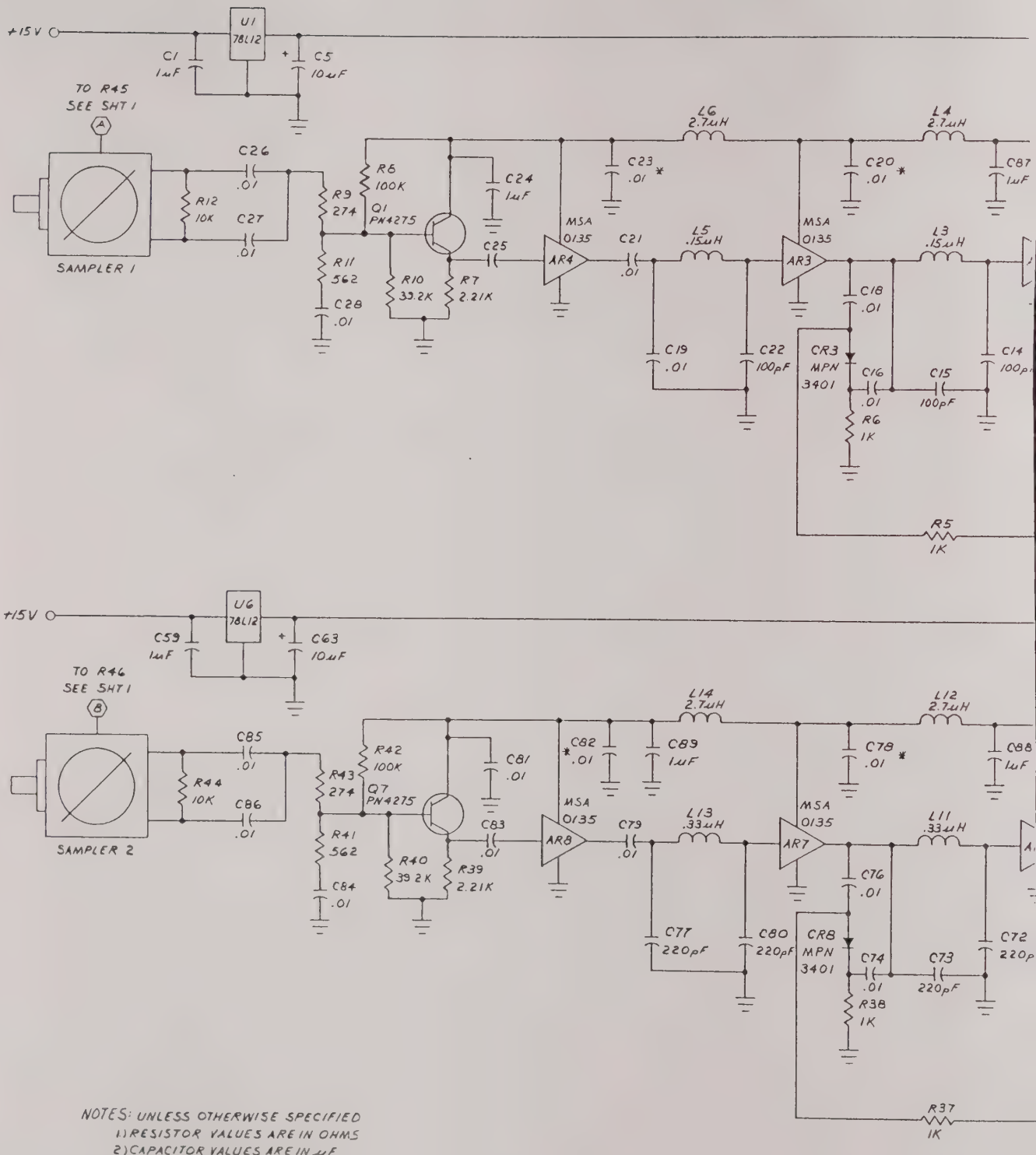

NOTES: UNLESS OTHERWISE SPECIFIED
1) RESISTOR VALUES ARE IN OHMS
2) CAPACITOR VALUES ARE IN μF
3) * INDICATES CHIP CAPACITORS

REVISIONS					
ZONE	REV	DESCRIPTION	ECO	DATE	APPV
	B	ADD C87,88,89; R47. CIRCUIT CHANGE		12-86	

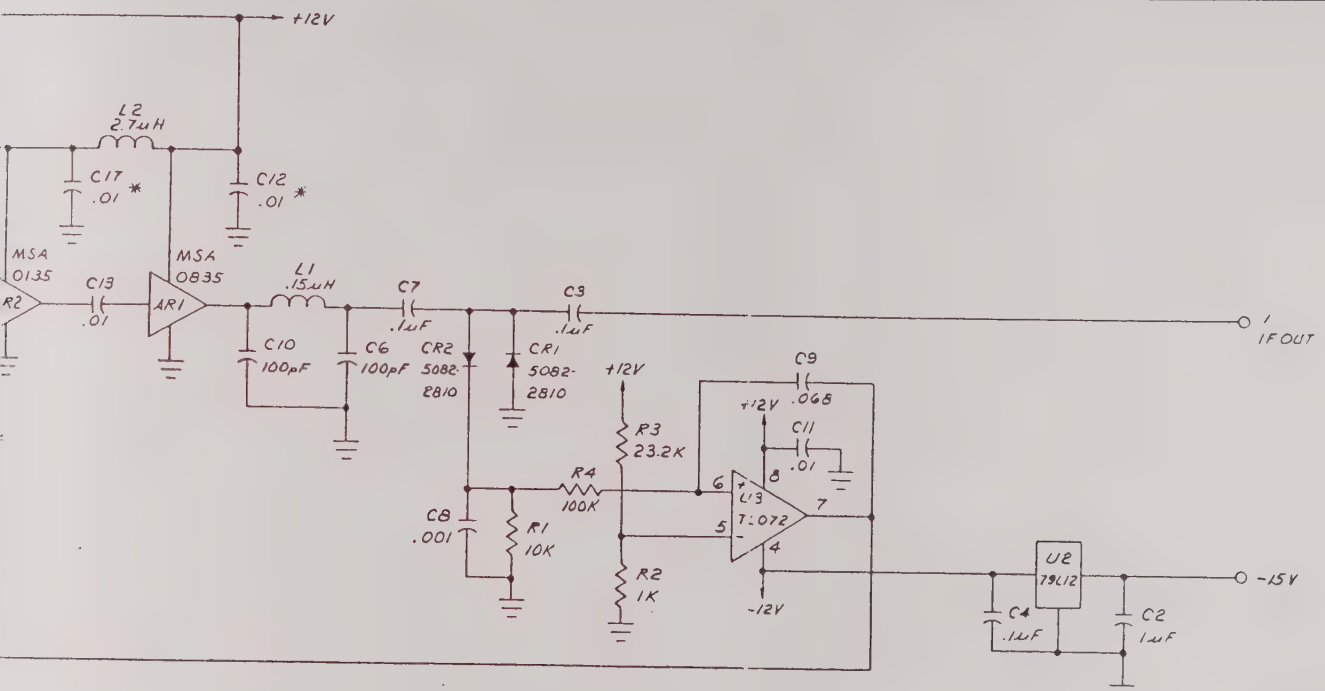

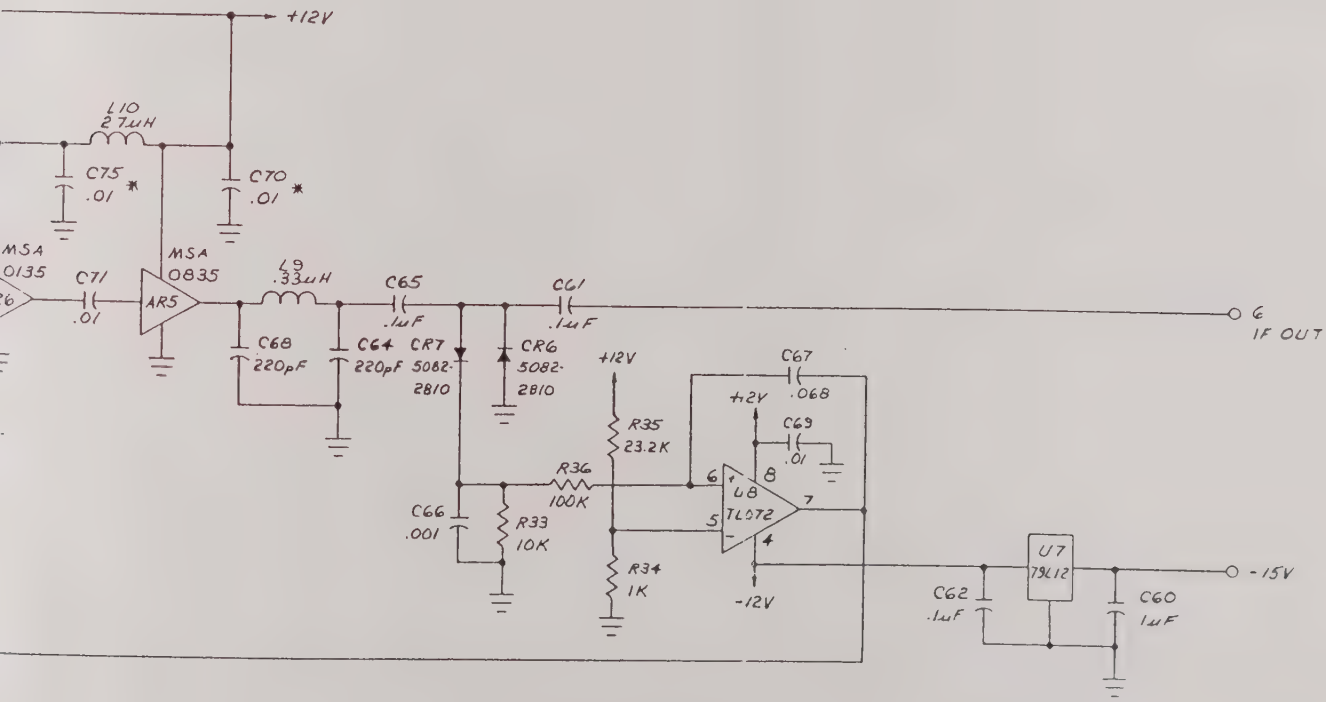

QTY REQD	FSCM NO	PART OR IDENTIFYING NO	NOMENCLATURE OR DESCRIPTION	MATERIAL SPECIFICATION

PARTS LIST

LAST USED		NOT USED
AR8	Q7	C41
C89	R47	R23,24
CR8	U8	
L16	Y2	

	910
NEXT ASSY	USED ON
APPLICATION	

UNLESS OTHERWISE SPECIFIED DIMENSIONS ARE IN INCHES
TOLERANCES ARE
FRACTIONS DECIMALS ANGLES
.. XX .
XXX

MATERIAL

FINISH

DO NOT SCALE DRAWING

CONTRACT NO

APPROVALS	DATE
DRAWN KDN	12-86
CHECKED	
ENG	
QA	

Giga-tronics

100 MHz MODULE

SIZE	FSCM NO	DWG NO	REV
D	58900	1010SC4202	B

SCALE ~ SHEET 2 OF 2

4 3 2 1

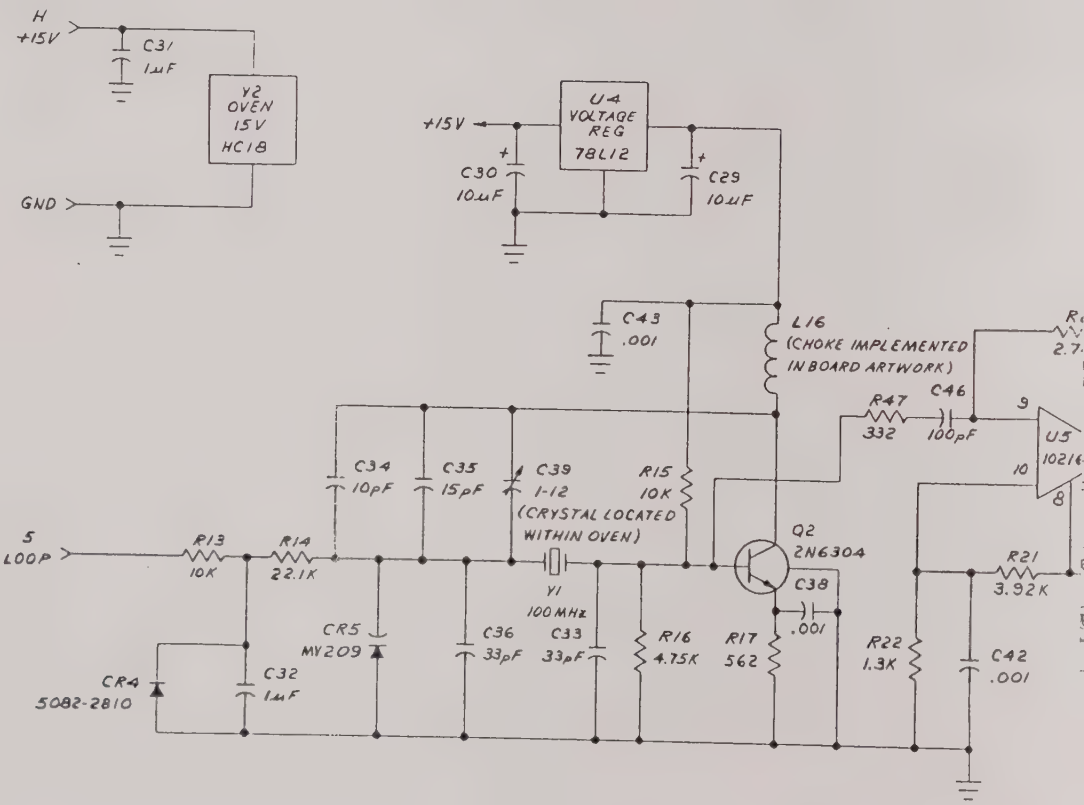

NOTES: UNLESS OTHERWISE SPECIFIED
1. RESISTOR VALUES ARE IN OHMS
2. CAPACITOR VALUES ARE IN μF

DWG NO	SH	REV

REVISIONS

ZONE	REV	DESCRIPTION	ECO	DATE	APPV
	B	ADD C87,88,89; R47 CIRCUIT CHANGE		12-86	

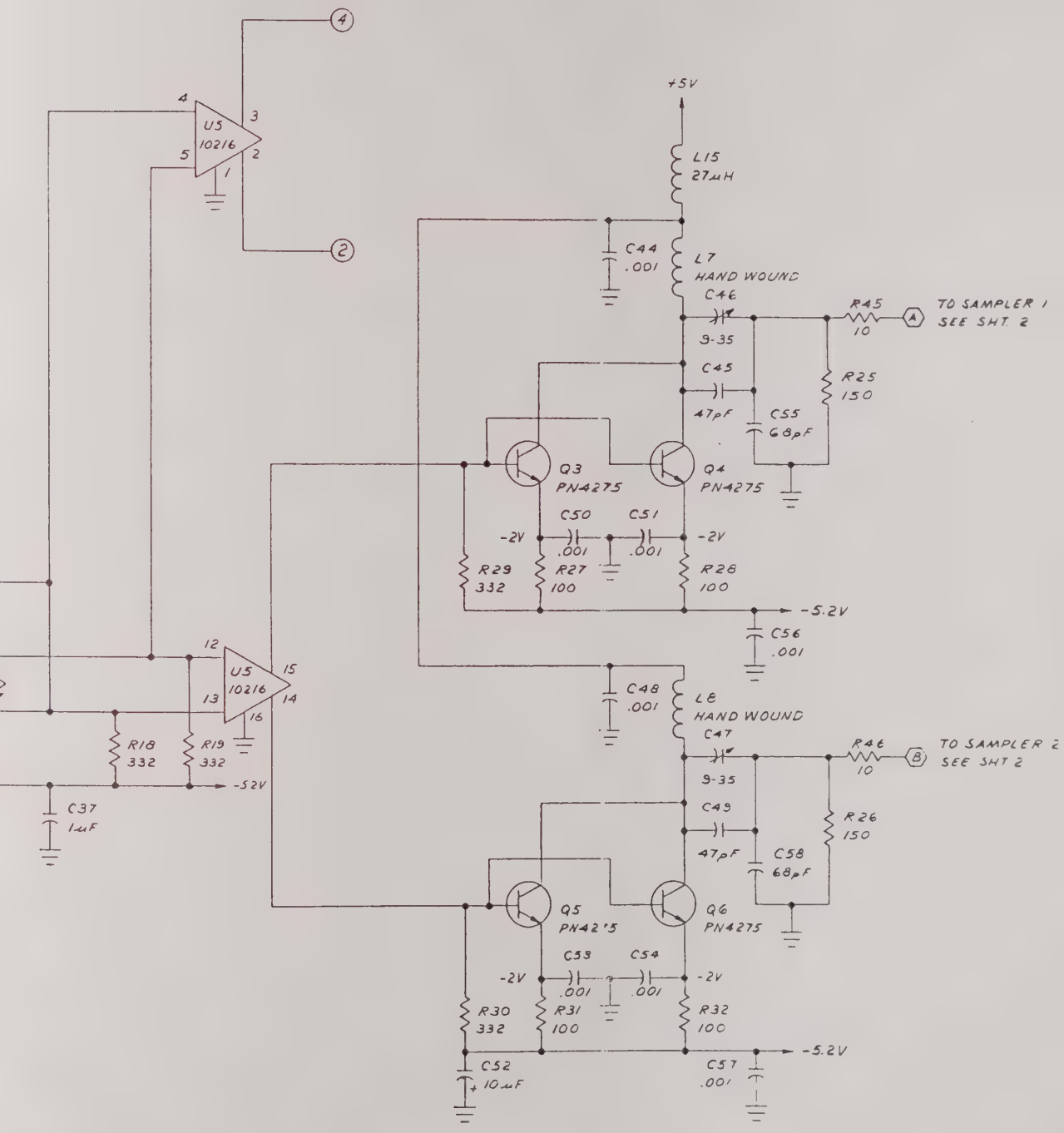

QTY REQD	FSCM NO	PART OR IDENTIFYING NO	NOMENCLATURE OR DESCRIPTION	MATERIAL SPECIFICATION
			PARTS LIST	

LAST USED	NOT USED
AR8 Q7	C41
C89 R47	R23,24
CR8 U8	
L16 Y2	

	910
NEXT ASSY	USED ON
APPLICATION	

UNLESS OTHERWISE SPECIFIED DIMENSIONS ARE IN INCHES
TOLERANCES ARE
FRACTIONS DECIMALS ANGLES
.XX ±
.XXX ±

MATERIAL

FINISH

DO NOT SCALE DRAWING

CONTRACT NO

APPROVALS	DATE
DRAWN KDN	12-86
CHECKED	
ENG	
Q	

Giga-tronics

100 MHz MODULE

SIZE	FSCM NO	DWG NO	REV
D	58900	1010S04202	B

SCALE ~ SHEET 1 OF 2

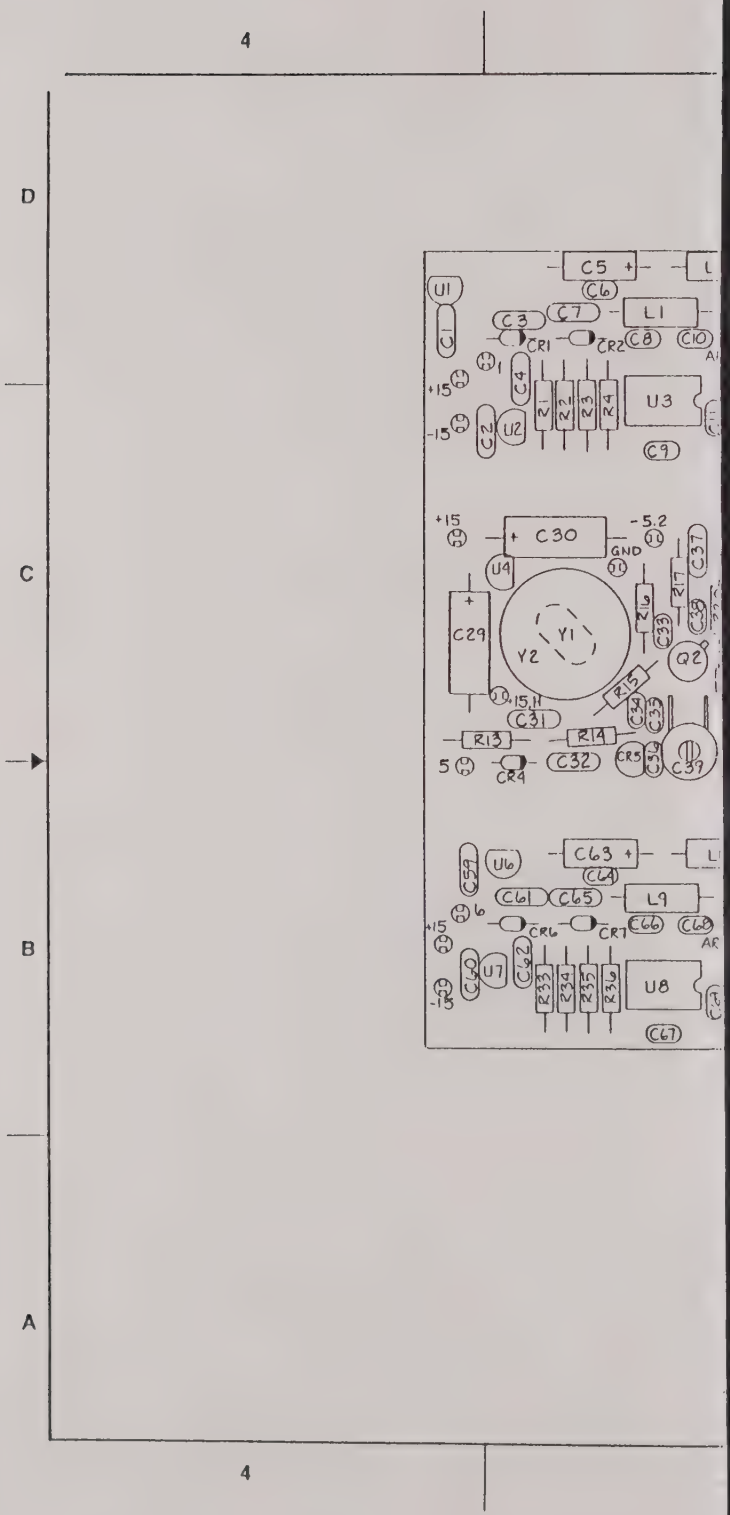
4
D
C
B
A
4
C5
C6
U1
C1
C3
C7
L1
CR1
CR2
C8
C10
C4
+15
-15
C2
U2
R1
R2
R3
R4
U3
C9
+15
C30
-5.2
GND
U4
C37
R17
C29
Y1
Y2
R16
C33
C38
Q2
R15
+15,H
C31
C34
C35
R13
R14
5
CR4
C32
CR5
C36
C39
C63
C59
U6
C64
C61
C65
L9
6
+15
CR6
CR7
C66
C68
C60
U7
C62
R33
R34
R35
R36
U8
-15
C67

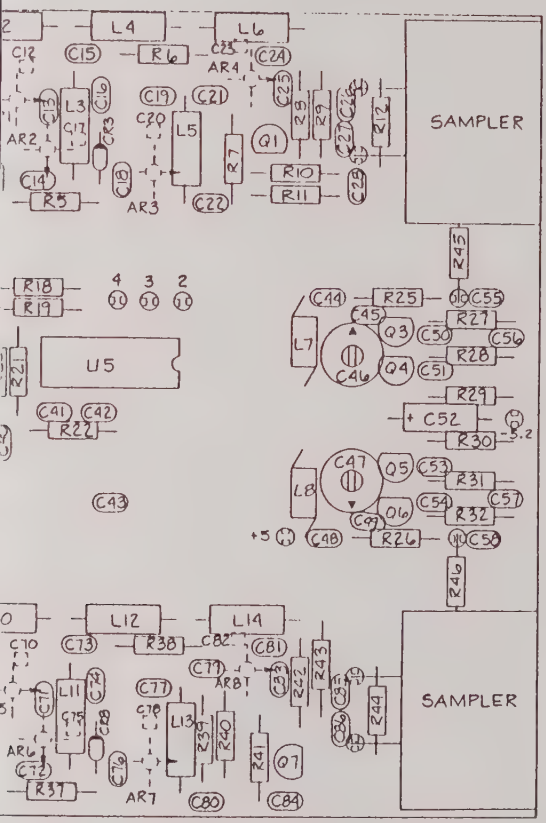

REVISIONS

ZONE	REV	DESCRIPTION	ECO	DATE	APPV

DWG NO | SH | REV

PARTS LIST

QTY REQD	FSCM NO	PART OR IDENTIFYING NO	NOMENCLATURE OR DESCRIPTION	MATERIAL SPECIFICATION

UNLESS OTHERWISE SPECIFIED DIMENSIONS ARE IN INCHES
TOLERANCES ARE
FRACTIONS DECIMALS ANGLES
XX ±
XXX ±

CONTRACT NO

APPROVALS	DATE
DRAWN cp	4·86
CHECKED	
ENG	
QA	

MATERIAL

FINISH

NEXT ASSY | USED ON

APPLICATION

DO NOT SCALE DRAWING

Gigatronics

100 MHz MODULE PC ASSY

SIZE	FSCM NO	DWG NO	REV
C	58900	101CA04202	A

SCALE 2:1 SHEET 1 OF 2

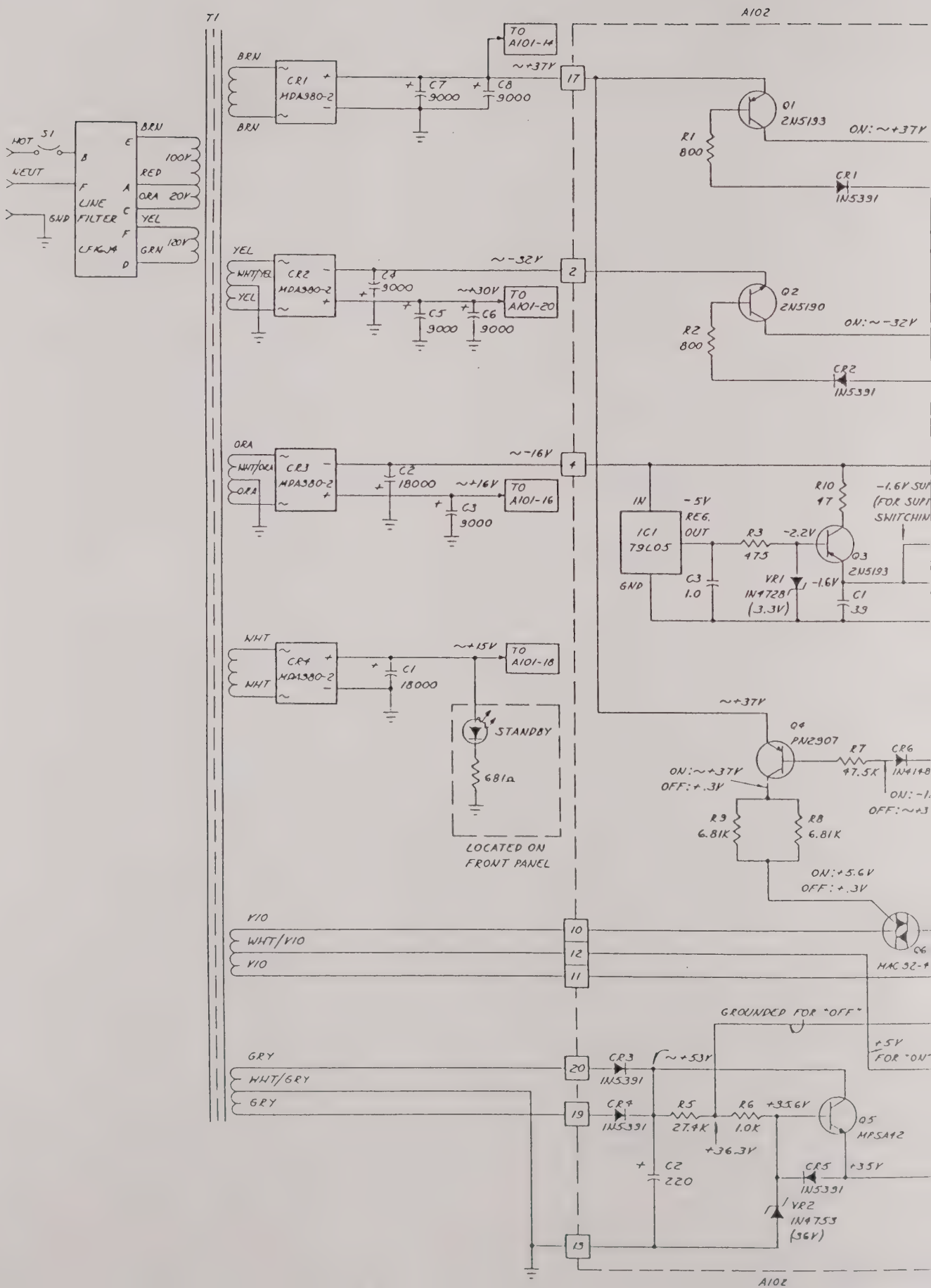
T1
A102
HOT
S1
NEUT
GND
LINE FILTER
BRN
RED
ORA
YEL
GRN
100V
120V
240V
CR1 MDA980-2
CR2 MDA980-2
CR3 MDA980-2
CR4 MDA980-2
C7 9000
C8 9000
C4 9000
C5 9000
C6 9000
C2 18000
C3 9000
C1 18000
~+37V
~-32V
~+30V
~-16V
~+15V
TO A101-14
TO A101-20
TO A101-16
TO A101-18
17
2
1
Q1 2N5193
ON: ~+37V
R1 800
CR1 IN5391
Q2 2N5190
ON: ~-32V
R2 800
CR2 IN5391
IC1 79L05
IN
OUT
GND
-5V REG.
C3 1.0
R3 475
-2.2V
Q3 2N5193
VR1 IN4728 (3.3V)
-1.6V
C1 .39
R10 47
-1.6V SUP
(FOR SUPP
SWITCHIN
STANDBY
681Ω
LOCATED ON FRONT PANEL
Q4 PN2907
ON: ~+37V
OFF: +.3V
R7 47.5K
CR6 IN4148
ON: -1
OFF: ~+3
R9 6.81K
R8 6.81K
ON: +5.6V
OFF: +.3V
Q6
MAC 32-4
VIO
WHT/VIO
10
12
11
GROUNDED FOR "OFF"
+5V FOR "ON"
GRY
WHT/GRY
20
19
13
CR3 IN5391
CR4 IN5391
~+53V
R5 27.4K
R6 1.0K
+35.6V
+36.3V
Q5 MPSA42
C2 220
CR5 IN5391
+35V
VR2 IN4753 (36V)
A102

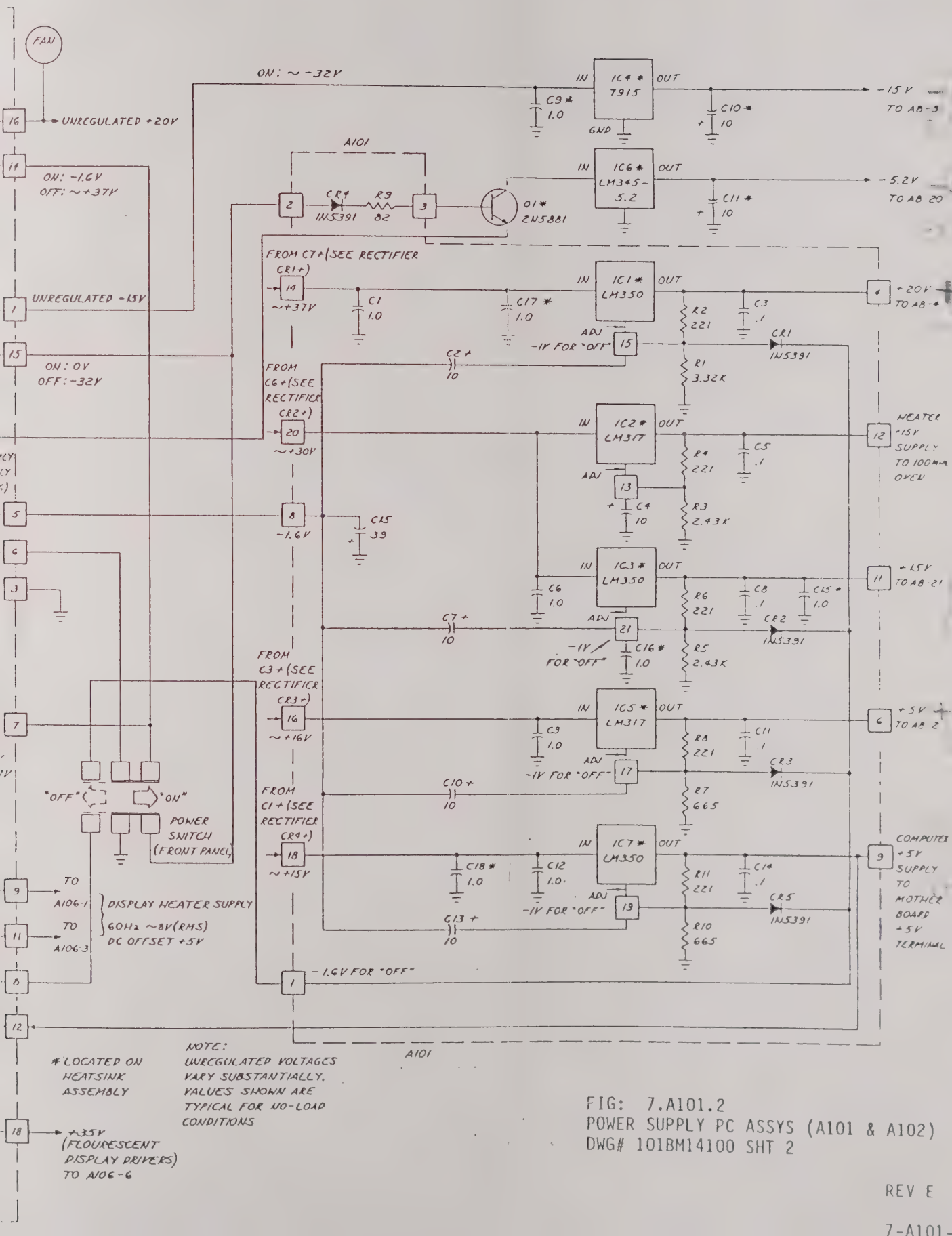

FIG: 7.A101.2
POWER SUPPLY PC ASSYS (A101 & A102)
DWG# 101BM14100 SHT 2

REV E

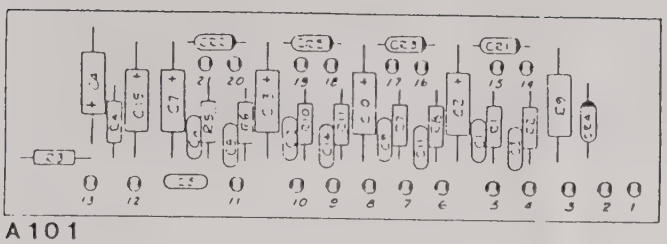

A101

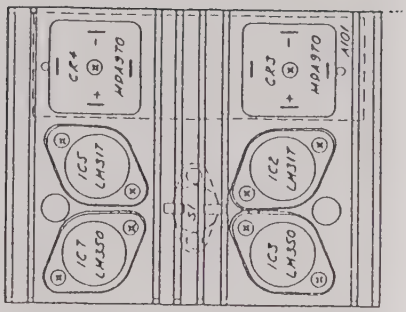

HEATSINK ASSY

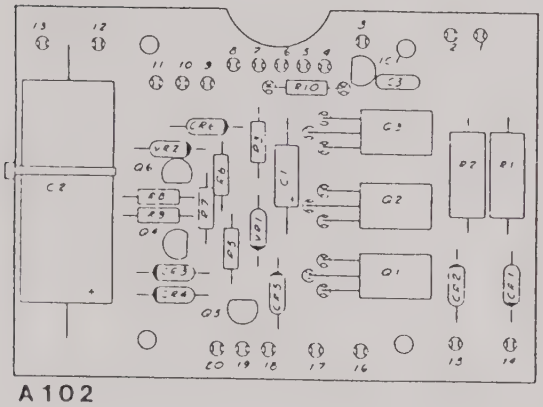

A102

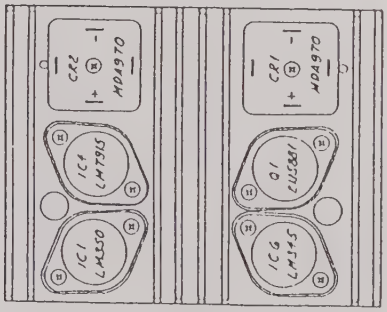

POWER SUPPLY--Circuit Boards A101 and A102

GENERAL

A variety of regulated and unregulated voltages are produced by the power supply, which uses a conventional transformer/rectifier/filter/regulator approach; the output voltages are electronically switched. To provide adequate heat dissipation, all high power components are located on finned heat sinks and cooled by the direct exhaust of a fan. The fan is powered by a DC motor connected to the unregulated +20V supply; its speed increases with line voltage but is independent of line frequency. A switch increases fan speed when the instrument's top cover is in place.

The power transformer primary is connected directly to the line through filter/voltage-selector/fuse holder LF1. The transformer is always energized when the unit is plugged in. Rectifiers CR1 through CR4, and capacitors C1 through C8, furnish the unregulated voltages for the majority of the power supply. Thermal switch S1, mounted on the heatsink, acts as a high temperature safety.

FIG: 7.A101.1
POWER SUPPLY PC ASSYS (A101 & A102)
DWG# 101BM14100 SHT 1

REV E

POWER SUPPLY CIRCUIT BOARD A102

This board is mounted outside the heat sink and is used to generate two unregulated outputs and three regulated outputs. A positive rectified voltage is received at pin 17 (from CR1+) and applied to the emitter of Q1. The collector supplies the output to pin 16; this is the unregulated "+20V" supply (in practice, usually nearer +30V). The base diode CR1 is used to switch the supply: when the power switch is in the "on" position it ties CR1's cathode (A102-14) to the -1.6V supply, forward-biasing both it and Q1. The unregulated -15V supply is similar; a negative rectified voltage is received at A102-2 (from CR2-) and applied to the emitter of Q2. The collector supplies the -15V output to A102-1. The base diode CR2 switches the supply: with the power switch "on" CR2's anode (A102-15) is tied to ground, forward-biasing both it and Q2.

The -1.6V supply is used solely to switch other supplies. Regulator IC1 takes a negative rectified voltage at A102-4 (from CR3-), and produces a -5V output; the circuit including Q3, R3 and R10 reduces this to a -1.6V supply on its collector (see A102-5 and -6). A zener diode (VR1) limits the output voltage.

The two remaining supplies on this board are used by the fluorescent displays. The display heater voltage is an 8V (RMS) AC supply taken directly from a center-tapped secondary transformer winding. A +5V DC component is applied to the tap (see A102-12; the voltage comes from the Computer +5V supply). Triac Q6 switches the supply; the circuit including Q4 and CR6 turns the supply on by applying a positive voltage to the gate of the triac when the power switch connects the -1.6V supply to the cathode of CR6, forward-biasing it. The heater voltage appears at A102-9 and -11. The other supply needed by the fluorescent displays is the +35V output at the emitter of Q5 (A102-18). An AC voltage from a transformer secondary is rectified by CR3 and CR4, filtered by C2 and regulated by zener diode VR2 and applied to the base of the transistor. The supply is shut off when the power switch applies a ground to the junction of R5 and R6 (see A102-8).

POWER SUPPLY CIRCUIT BOARD A101

This board is mounted inside the heat sink and includes the components connected to the high power regulators. At A101-1, the -1.6V supply is furnished to the board whenever the power switch is in the off position. Through diodes CR1, CR2, CR3 and CR5, this negative voltage is applied to the adjust pins of regulators IC1 (+20V), IC3 (+15V), IC5 (+5V), and IC7 (Computer +5V), shutting them off. IC2 (Heater +15V) is not furnished with this control voltage because it's output must be active whenever the instrument is plugged in (it warms the 100 MHz oscillator). The output voltages of these positive regulators are determined by simple resistor networks. Filter capacitors between the adjust pins and the -1.6V supply take noise on the positive supplies "below ground".

IC6 produces a -5.2V supply required for ECL logic. Its input comes from Q1's collector; the negative voltage applied to Q1's emitter comes from rectifier CR3- (see A102-4). The supply is switched on by applying a ground to the cathode of CR4 (at A101-2), forward-biasing it and Q1.

The output of IC4 is the -15V supply; the input to the regulator is the unregulated -15V output from A102-1, switched as described above.

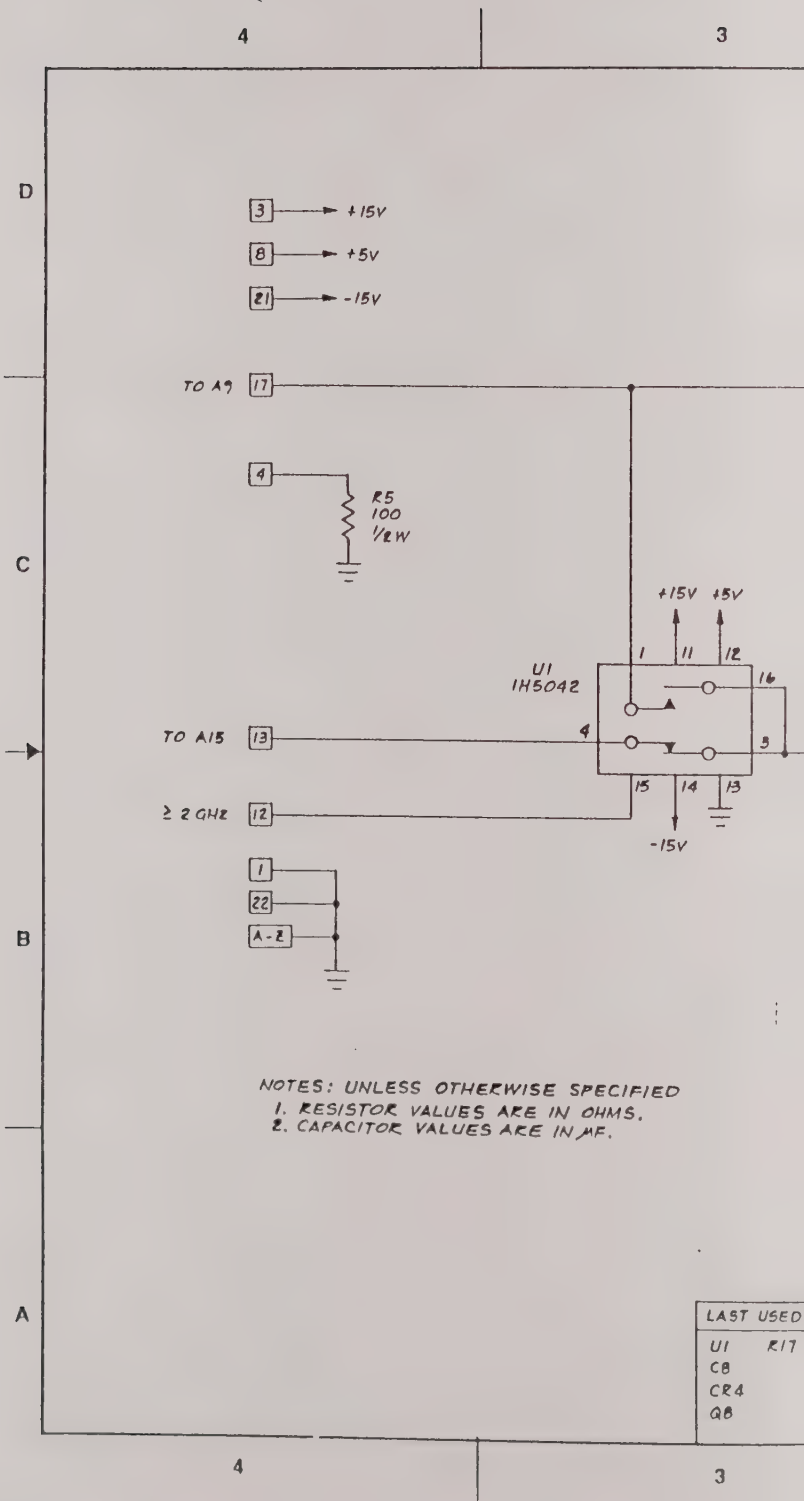
4
3
D
C
B
A
3 → +15V
8 → +5V
21 → -15V
TO A9 17
4
R5
100
1/2W
+15V +5V
U1
IH5042
1
11
12
16
4
3
15
14
13
TO A15 13
≥ 2 GHz 12
-15V
1
22
A-Z
NOTES: UNLESS OTHERWISE SPECIFIED
1. RESISTOR VALUES ARE IN OHMS.
2. CAPACITOR VALUES ARE IN MF.
LAST USED
U1 R17
C8
CR4
Q8
4
3

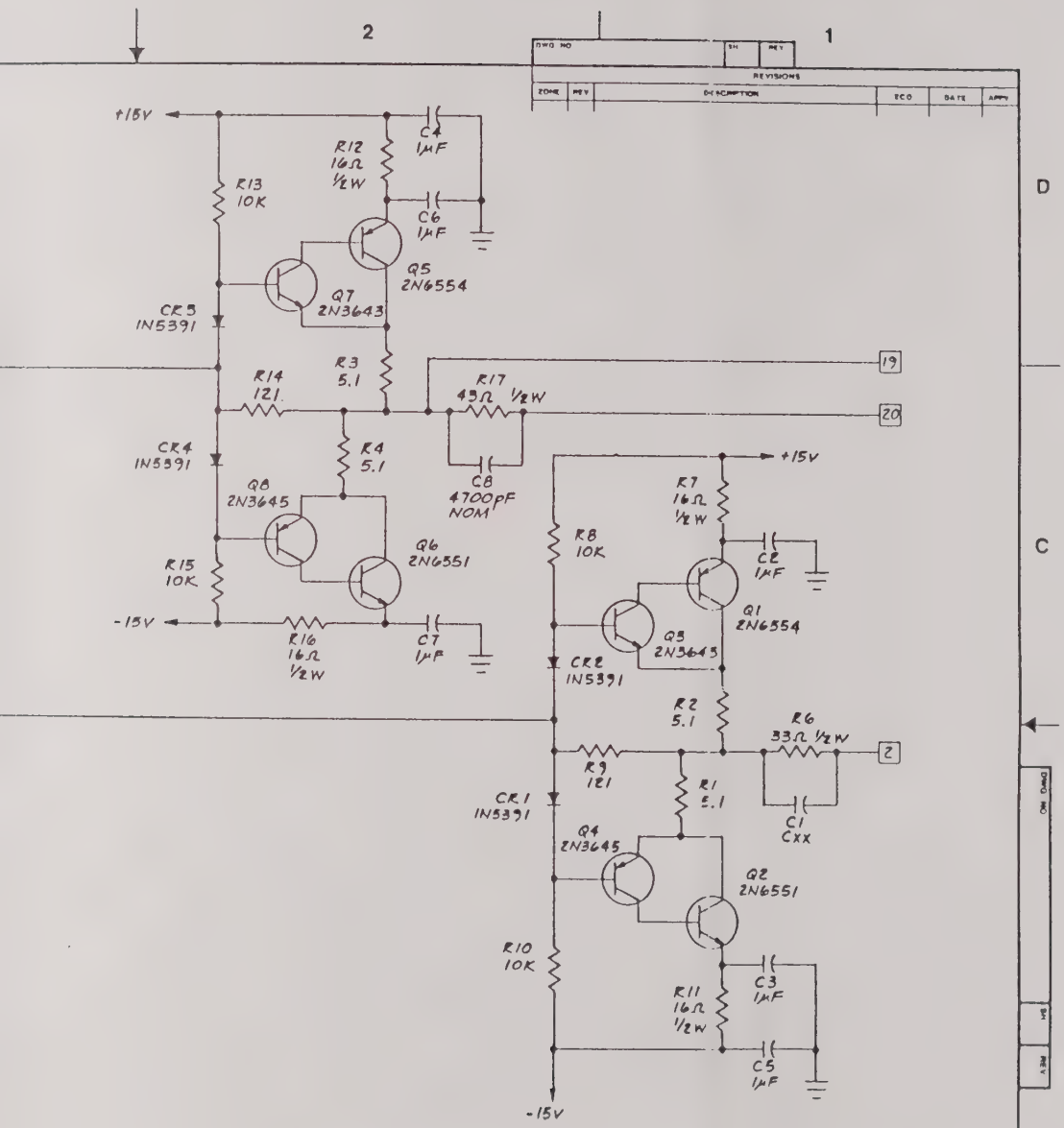

QTY REQD	FSCM NO	PART OR IDENTIFYING NO.	NOMENCLATURE OR DESCRIPTION	MATERIAL SPECIFICATION

PARTS LIST

NOT USED

APPLICATION

UNLESS OTHERWISE SPECIFIED DIMENSIONS ARE IN INCHES TOLERANCES ARE FRACTIONS DECIMALS ANGLES .XX ± .XXX ±

MATERIAL

FINISH

DO NOT SCALE DRAWING

CONTRACT NO

APPROVALS	DATE
DRAWN EM	11/85
CHECKED	
ENG.	
QA	

Gigatronics

FM DRIVER

SIZE C | FSCM NO 58900 | DWG NO 105CS17800 | REV A

SCALE | SHEET 1 OF 1

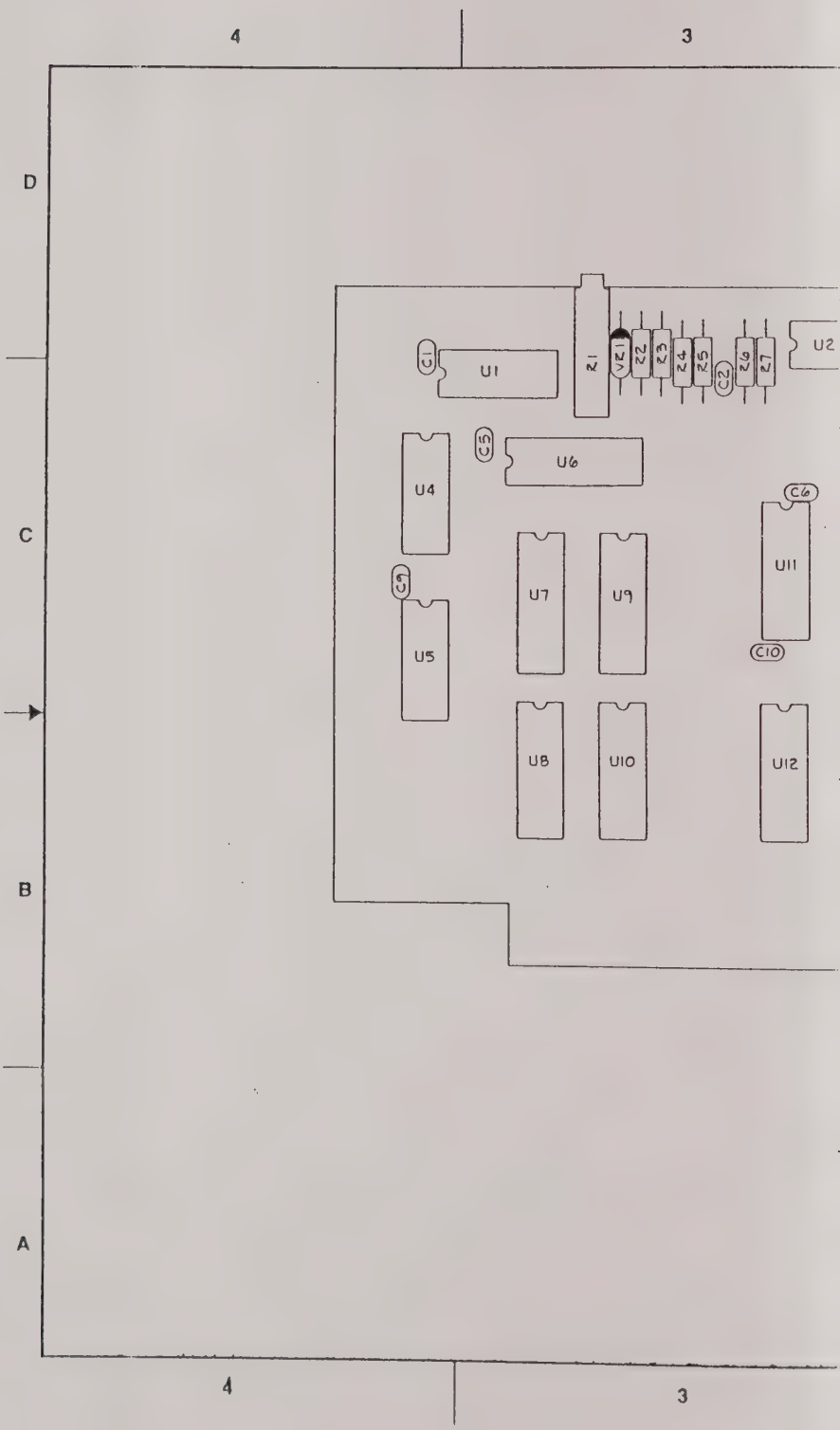
4
3
D
C
B
A
4
3
C1
U1
R1
VR1
R2
R3
R4
R5
C2
R6
R7
U2
C5
U6
U4
C6
U11
C9
U7
U9
U5
C10
U8
U10
U12

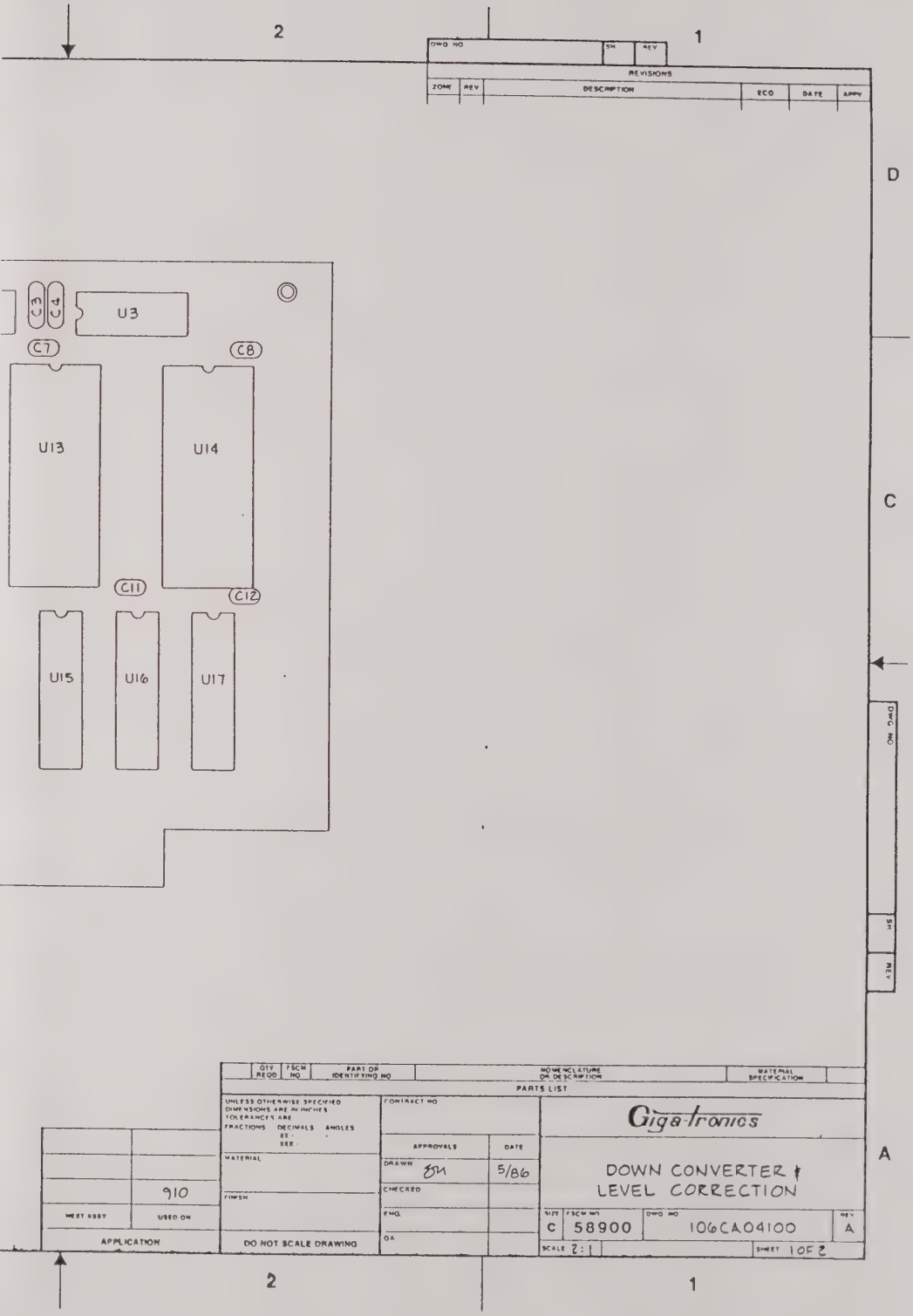
2
1
DWG NO
SH
REV
REVISIONS
ZONE
REV
DESCRIPTION
ECO
DATE
APPV
D
C
A
C3
C4
U3
C7
C8
U13
U14
C11
C12
U15
U16
U17
DWG NO
SH
REV
QTY REQD
FSCM NO
PART OR IDENTIFYING NO
NOMENCLATURE OR DESCRIPTION
MATERIAL SPECIFICATION
PARTS LIST
UNLESS OTHERWISE SPECIFIED DIMENSIONS ARE IN INCHES TOLERANCES ARE
FRACTIONS
DECIMALS
ANGLES
MATERIAL
FINISH
DO NOT SCALE DRAWING
CONTRACT NO
APPROVALS
DATE
DRAWN
5/86
CHECKED
ENGR
QA
Giga-tronics
DOWN CONVERTER
LEVEL CORRECTION
SIZE
C
FSCM NO
58900
DWG NO
106CA04100
REV
A
SCALE 2:1
SHEET 1 OF 2
910
NEXT ASSY
USED ON
APPLICATION
2
1

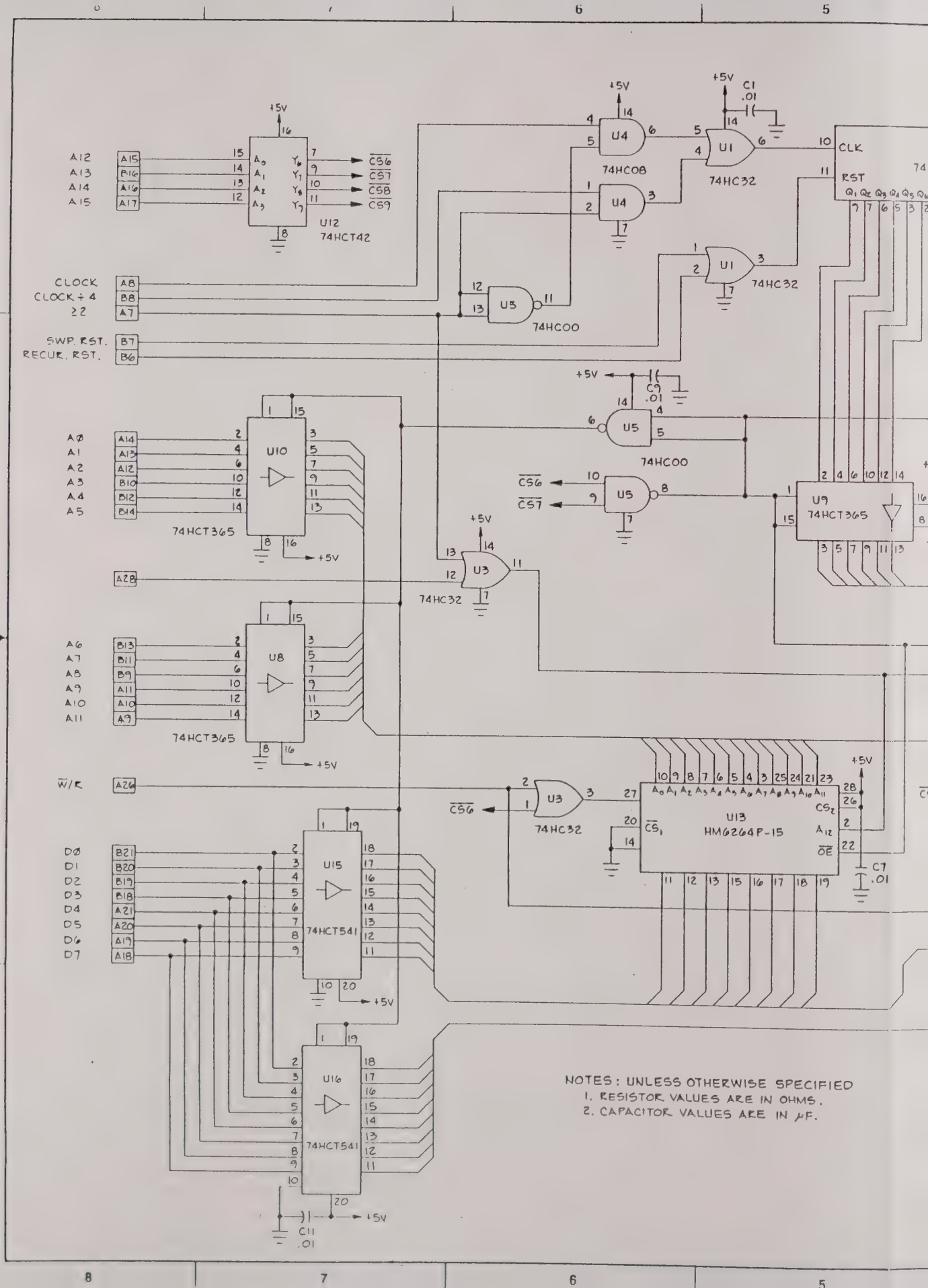
A12
A13
A14
A15
U12
74HCT42
CLOCK
CLOCK ÷ 4
≥2
SWP. RST.
RECUR. RST.
U4
74HC08
U1
74HC32
U5
74HC00
U10
74HCT365
U8
74HCT365
U3
74HC32
U9
74HCT365
U15
74HCT541
U16
74HCT541
U13
HM6264P-15
W/R
D0
D1
D2
D3
D4
D5
D6
D7
+5V
C1 .01
C9 .01
C7 .01
C11 .01
NOTES: UNLESS OTHERWISE SPECIFIED
1. RESISTOR VALUES ARE IN OHMS.
2. CAPACITOR VALUES ARE IN μF.

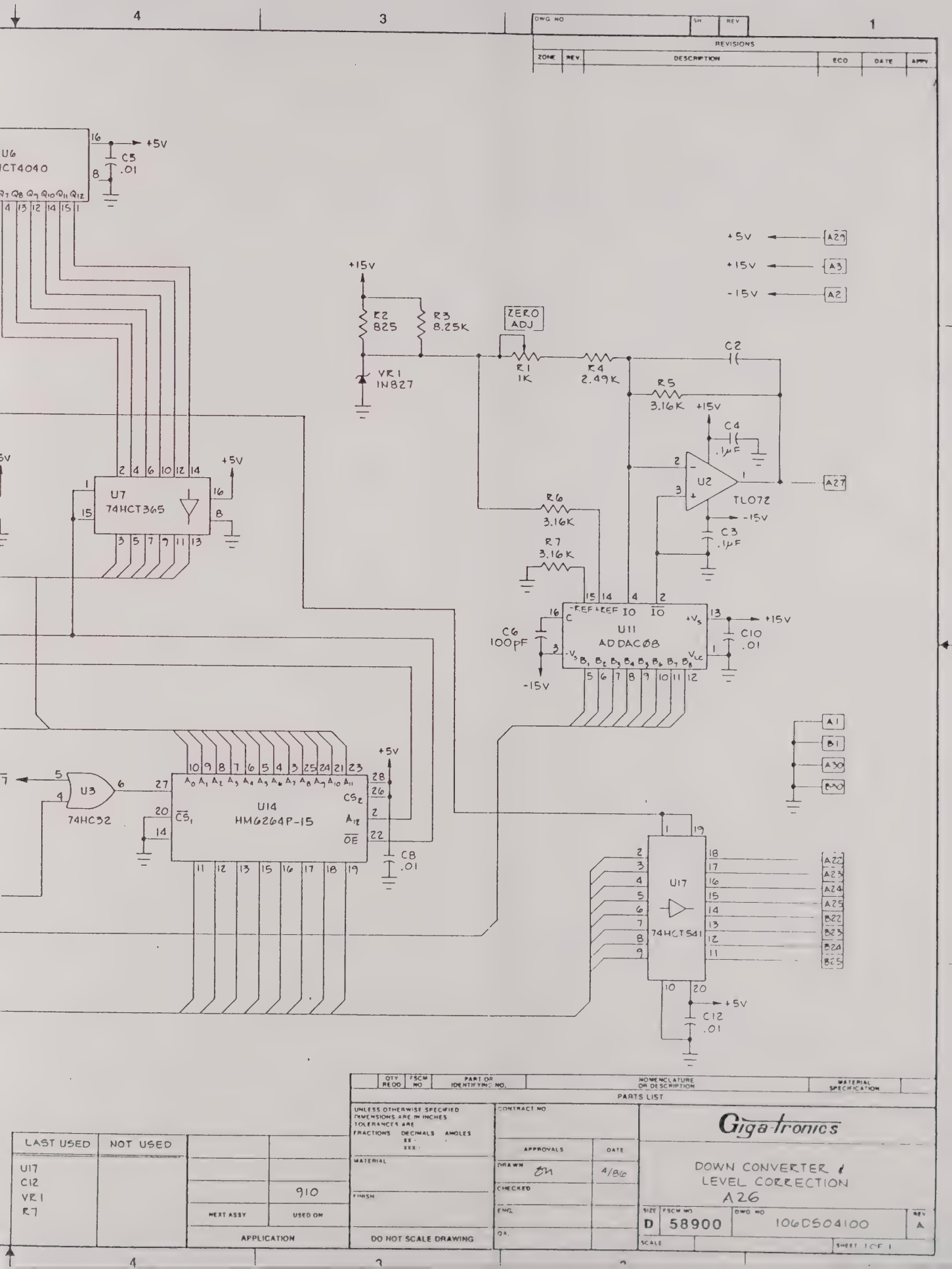
4
3
1
DWG NO
SH
REV
REVISIONS
ZONE
REV
DESCRIPTION
ECO
DATE
APPV
U6
CT4040
Q7 Q8 Q9 Q10 Q11 Q12
C5
.01
+5V
R2
825
R3
8.25K
ZERO
ADJ
R1
1K
R4
2.49K
VR1
IN827
+15V
-15V
C2
R5
3.16K
C4
.1μF
U2
TL072
C3
.1μF
R6
3.16K
R7
3.16K
A29
A3
A2
A27
U7
74HCT365
U11
AD DAC08
C6
100pF
C10
.01
C8
.01
U3
74HC32
U14
HM6264P-15
U17
74HCT541
C12
.01
A1
B1
A30
B30
A22
A23
A24
A25
B22
B23
B24
B25
PARTS LIST
QTY REQD
FSCM NO
PART OR IDENTIFYING NO.
NOMENCLATURE OR DESCRIPTION
MATERIAL SPECIFICATION
UNLESS OTHERWISE SPECIFIED
DIMENSIONS ARE IN INCHES
TOLERANCES ARE
FRACTIONS DECIMALS ANGLES
CONTRACT NO
APPROVALS
DATE
DRAWN
BN
4/86
CHECKED
ENG.
QA.
MATERIAL
FINISH
DO NOT SCALE DRAWING
Gigatronics
DOWN CONVERTER / LEVEL CORRECTION
A26
SIZE
D
FSCM NO
58900
DWG NO
106D504100
REV
A
SCALE
SHEET 1 OF 1
LAST USED
NOT USED
U17
C12
VR1
R7
910
NEXT ASSY
USED ON
APPLICATION

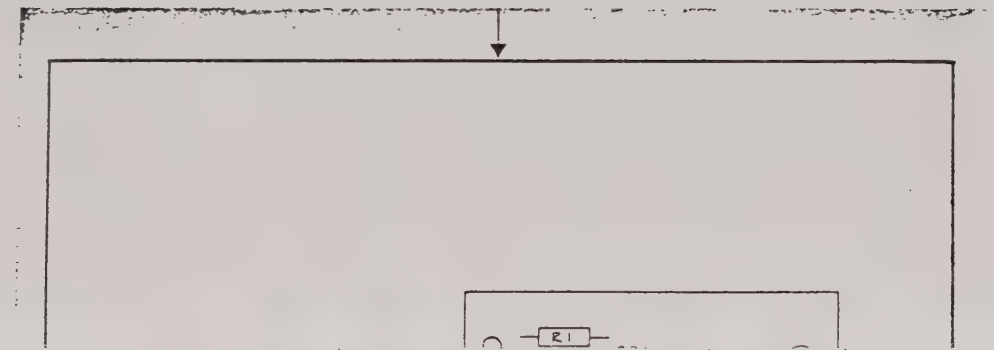
R1

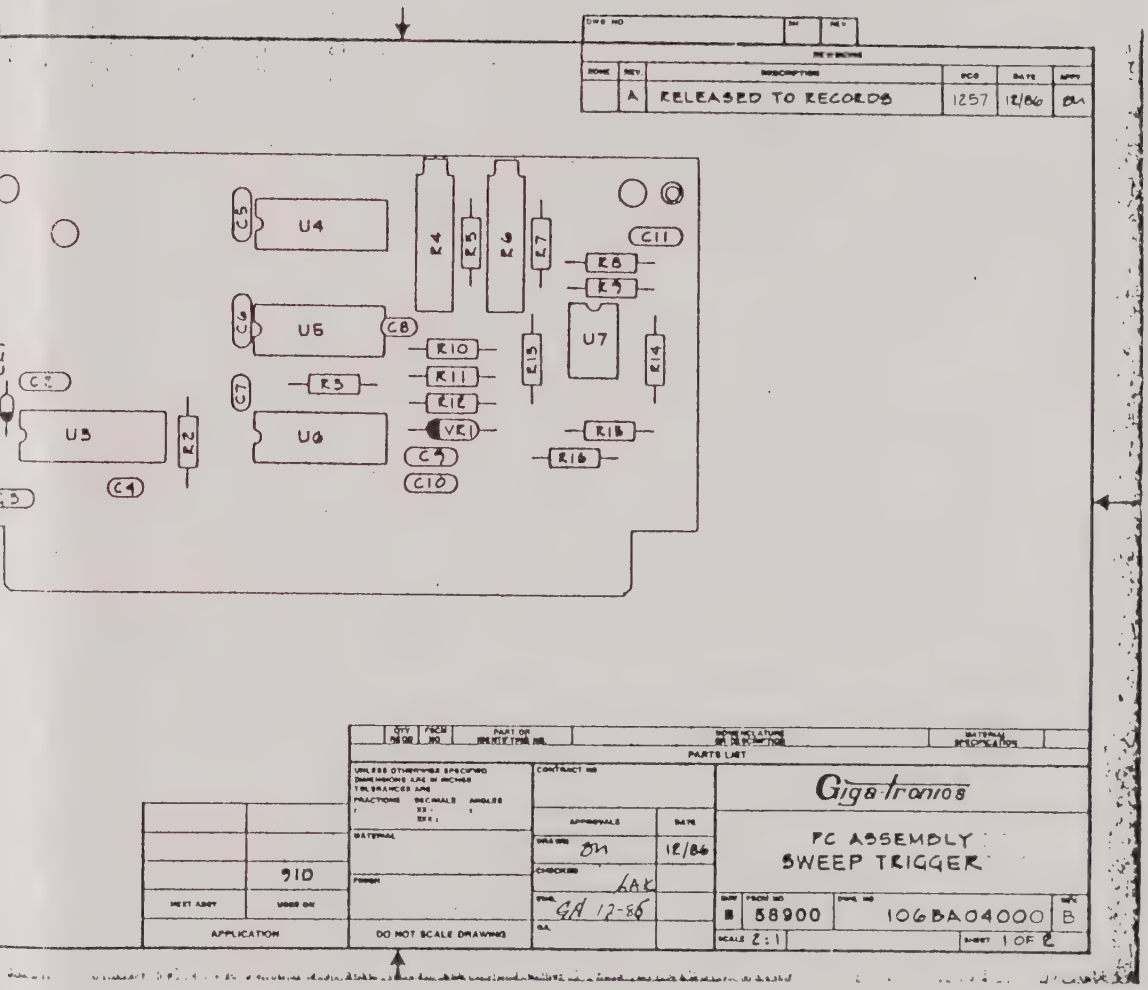

DWG NO
REV
REVISIONS
ZONE
REV.
DESCRIPTION
PCO
DATE
APPV
A
RELEASED TO RECORDS
1257
12/86
BM
U4
U5
U6
U7
U3
C5
C6
C7
C8
C9
C10
C11
R2
R3
R4
R5
R6
R7
R8
R9
R10
R11
R12
R13
R14
R15
R16
VR1
PARTS LIST
UNLESS OTHERWISE SPECIFIED DIMENSIONS ARE IN INCHES TOLERANCES ARE
FRACTIONS DECIMALS ANGLES
MATERIAL
FINISH
CONTRACT NO
APPROVALS
DATE
DRAWN BM 12/86
CHECKED LAK
ENG GA 12-86
Gigatronics
PC ASSEMBLY
SWEEP TRIGGER
B
58900
106BA04000
B
SCALE 2:1
SHEET 1 OF 2
910
NEXT ASSY
USED ON
APPLICATION
DO NOT SCALE DRAWING

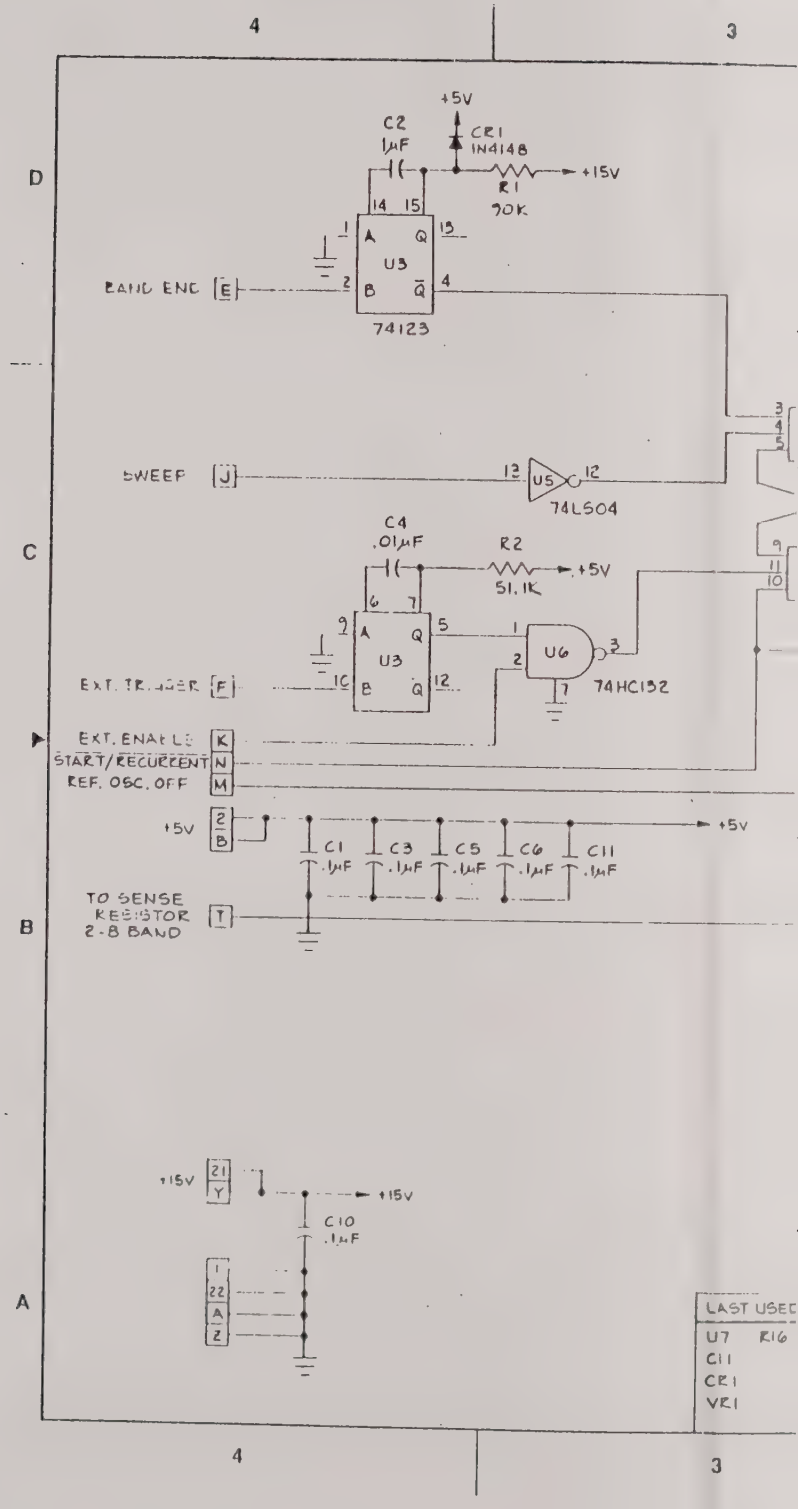
4
3
D
C
B
A
+5V
C2
1μF
CR1
1N4148
+15V
R1
90K
14 15
1
A
Q
13
U3
2
B
Q
4
74123
BAND END [E]
SWEEP [J]
13
U5
12
74LS04
C4
.01μF
R2
+5V
51.1K
6 7
9
A
Q
5
U3
10
B
Q
12
1
U6
3
2
74HC132
EXT. TRIGGER [F]
EXT. ENABLE [K]
START/RECURRENT [N]
REF. OSC. OFF [M]
+5V
2
B
+5V
C1
.1μF
C3
.1μF
C5
.1μF
C6
.1μF
C11
.1μF
TO SENSE
RESISTOR
2-8 BAND [T]
+15V
21
Y
+15V
C10
.1μF
1
22
A
Z
LAST USED
U7 R16
C11
CR1
VR1
4
3

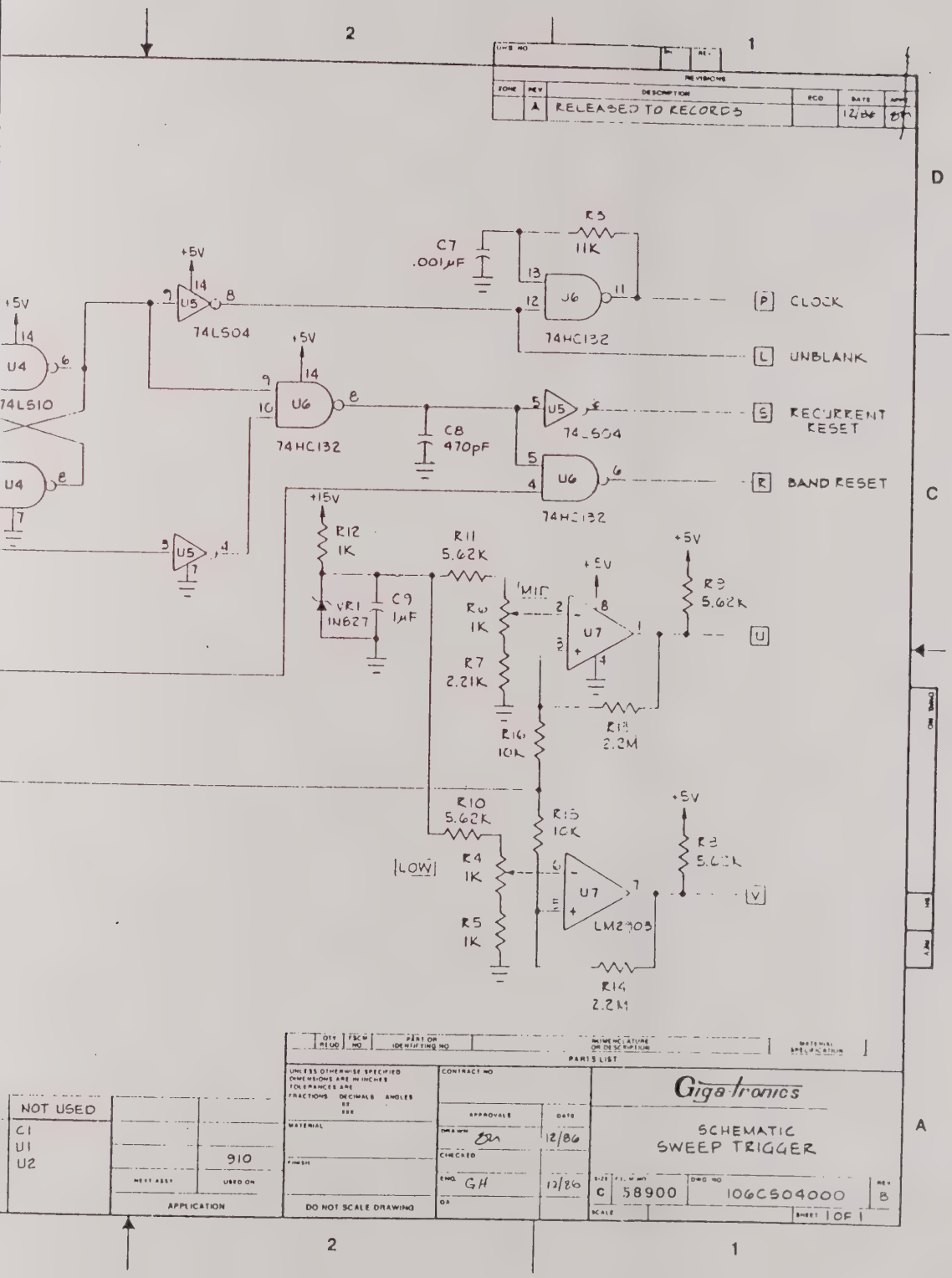

REVISIONS
ZONE
REV
DESCRIPTION
ECO
DATE
APPR
A
RELEASED TO RECORDS
12/86
D
C
A
R3
11K
C7
.001µF
U6
74HC132
P
CLOCK
L
UNBLANK
S
RECURRENT RESET
R
BAND RESET
+5V
U5
74LS04
U4
74LS10
U6
74HC132
C8
470pF
U5
74LS04
U6
74HC132
+15V
R12
1K
VR1
1N627
C9
1µF
R11
5.62K
MID
R6
1K
R7
2.21K
U7
R9
5.62K
U
R13
2.2M
R16
10K
R10
5.62K
R15
10K
LOW
R4
1K
R5
1K
U7
LM2903
R8
5.62K
V
R14
2.2M
PARTS LIST
QTY REQD
FSCM NO
PART OR IDENTIFYING NO
NOMENCLATURE OR DESCRIPTION
MATERIAL SPECIFICATION
NOT USED
C1
U1
U2
910
NEXT ASSY
USED ON
APPLICATION
UNLESS OTHERWISE SPECIFIED DIMENSIONS ARE IN INCHES TOLERANCES ARE FRACTIONS DECIMALS ANGLES
MATERIAL
FINISH
DO NOT SCALE DRAWING
CONTRACT NO
APPROVALS
DATE
DRAWN
12/86
CHECKED
ENG
GH
12/86
QA
Giga-tronics
SCHEMATIC
SWEEP TRIGGER
SIZE
C
FSCM NO
58900
DWG NO
106C504000
REV
B
SCALE
SHEET 1 OF 1

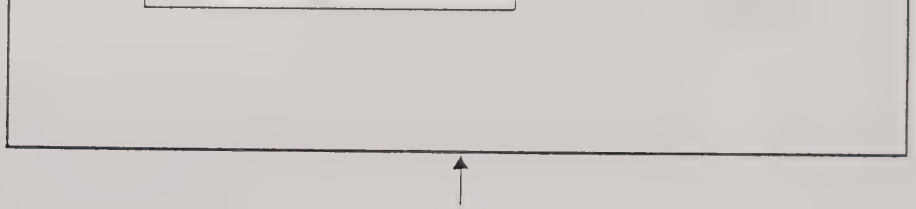

DWG NO	SH	REV

REVISIONS

ZONE	REV	DESCRIPTION	ECO	DATE	APPV

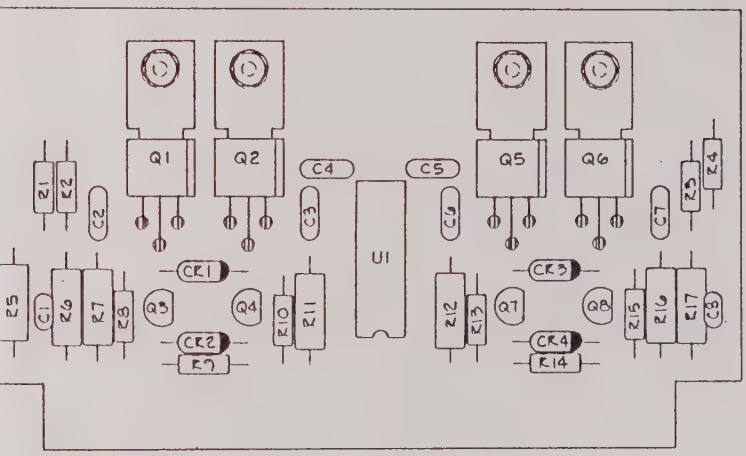

PARTS LIST

QTY REQD	FSCM NO	PART OR IDENTIFYING NO	NOMENCLATURE OR DESCRIPTION	MATERIAL SPECIFICATION

NEXT ASSY	USED ON
APPLICATION	

UNLESS OTHERWISE SPECIFIED DIMENSIONS ARE IN INCHES
TOLERANCES ARE
FRACTIONS DECIMALS ANGLES
XX ±
XXX

MATERIAL

FINISH

DO NOT SCALE DRAWING

CONTRACT NO		
APPROVALS	DATE	
DRAWN SM	1/86	
CHECKED		
ENG		
QA		

Giga-tronics

FM DRIVER

SIZE	FSCM NO	DWG NO	REV
B	58900	105BA17800	A

SCALE 2:1 SHEET 1 OF 2

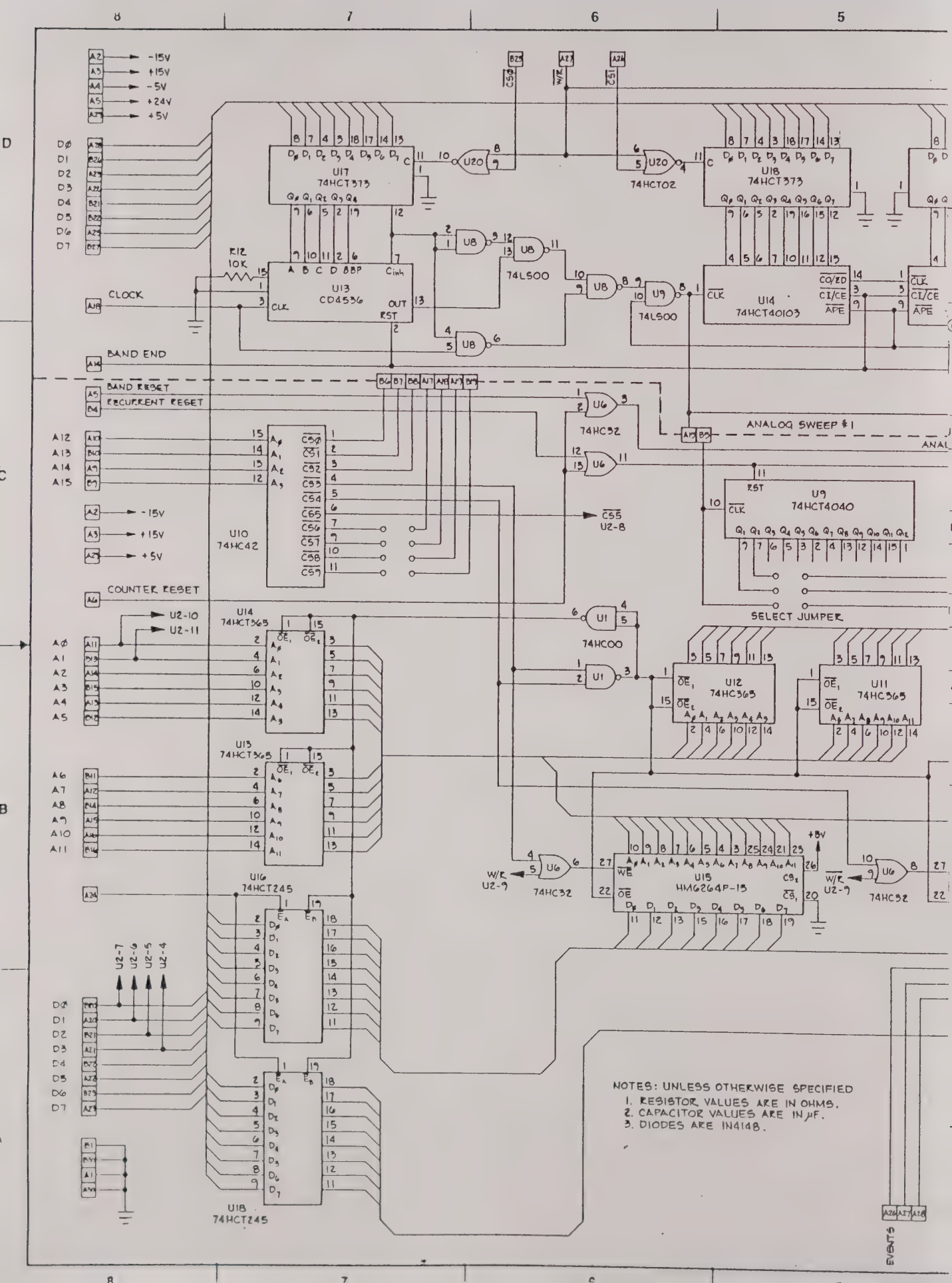
-15V
+15V
-5V
+24V
+5V
D0
D1
D2
D3
D4
D5
D6
D7
U17
74HCT373
U18
74HCT373
74HCT02
U20
U13
CD4536
R12
10K
CLOCK
BAND END
U8
74LS00
U9
74LS00
U14
74HCT40103
BAND RESET
RECURRENT RESET
ANALOG SWEEP #1
U6
74HC32
U10
74HC42
U9
74HCT4040
SELECT JUMPER
COUNTER RESET
U14
74HCT365
U1
74HC00
U12
74HC365
U11
74HC365
U13
74HCT365
U16
74HCT245
U15
HM6264P-15
+8V
W/R
U2-9
U2-10
U2-11
U2-7
U2-6
U2-5
U2-4
U18
74HCT245
NOTES: UNLESS OTHERWISE SPECIFIED
1. RESISTOR VALUES ARE IN OHMS.
2. CAPACITOR VALUES ARE IN μF.
3. DIODES ARE IN4148.
EVENTS

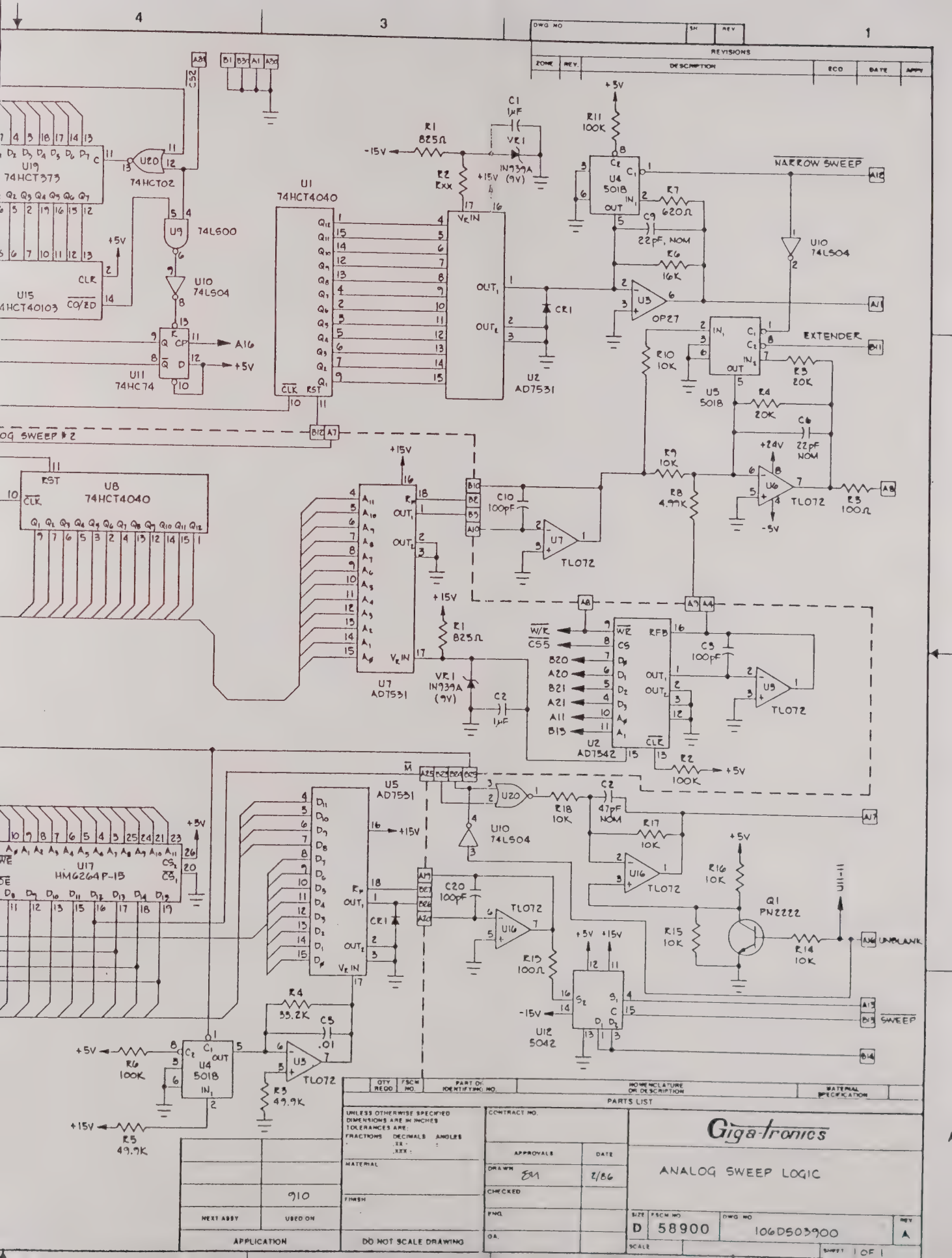

REVISIONS
ZONE
REV.
DESCRIPTION
ECO
DATE
APPV
U19
74HCT373
U20
74HCT02
U9
74LS00
U10
74LS04
U15
74HCT40103
U11
74HC74
U1
74HCT4040
U2
AD7531
U3
OP27
U4
5018
U5
5018
U6
TL072
U7
TL072
U8
74HCT4040
U7
AD7531
U9
TL072
U2
AD7542
U5
AD7531
U16
TL072
U17
HM6264P-15
U12
5042
Q1
PN2222
NARROW SWEEP
EXTENDER
UNBLANK
SWEEP
A16
A17
A18
A19
A20
A21
A22
A23
A24
A25
A26
A27
A28
A29
A30
A31
A32
B1
B2
B3
B4
B5
B6
B7
B8
B9
B10
B11
B12
B13
B14
B15
B16
B17
B18
B19
B20
B21
B22
B23
B24
B25
B26
B27
B28
B29
B30
B31
B32
+5V
-15V
+15V
+24V
-5V
R1 825Ω
R2 Rxx
C1 1μF
VR1 1N939A (9V)
R11 100K
R7 620Ω
C9 22pF, NOM
R6 16K
R10 10K
R3 20K
R4 20K
C6 22pF NOM
R9 10K
R8 4.99K
R5 100Ω
C10 100pF
C3 100pF
C2 1μF
R2 100K
R18 10K
C2 47pF NOM
R17 10K
R16 10K
R15 10K
R14 10K
C20 100pF
R19 100Ω
R4 33.2K
C5 .01
R3 49.9K
R6 100K
R5 49.9K
PARTS LIST
QTY REQD
FSCM NO.
PART OR IDENTIFYING NO.
NOMENCLATURE OR DESCRIPTION
MATERIAL SPECIFICATION
UNLESS OTHERWISE SPECIFIED DIMENSIONS ARE IN INCHES TOLERANCES ARE:
FRACTIONS
DECIMALS
ANGLES
MATERIAL
FINISH
CONTRACT NO.
APPROVALS
DATE
DRAWN
2/86
CHECKED
ENG.
QA.
Giga-tronics
ANALOG SWEEP LOGIC
SIZE
D
FSCM NO
58900
DWG NO
106D503900
REV
A
SCALE
SHEET 1 OF 1
910
NEXT ASSY
USED ON
APPLICATION
DO NOT SCALE DRAWING

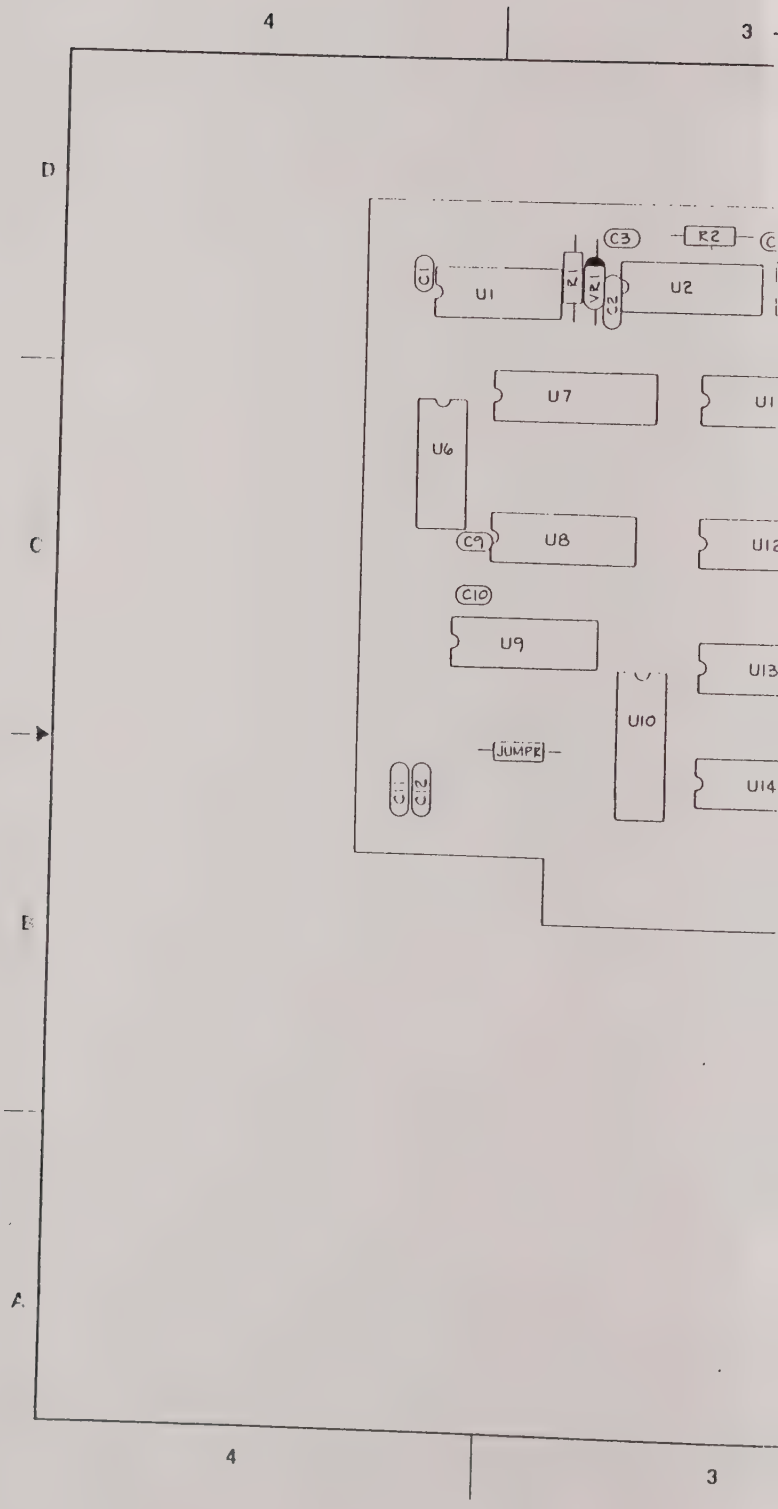
4
3
D
C
B
A
C3
R2
C1
U1
R1
VR1
C2
U2
U7
U6
C9
U8
C10
U9
U10
JUMPER
C11
C12
U13
U14
4
3

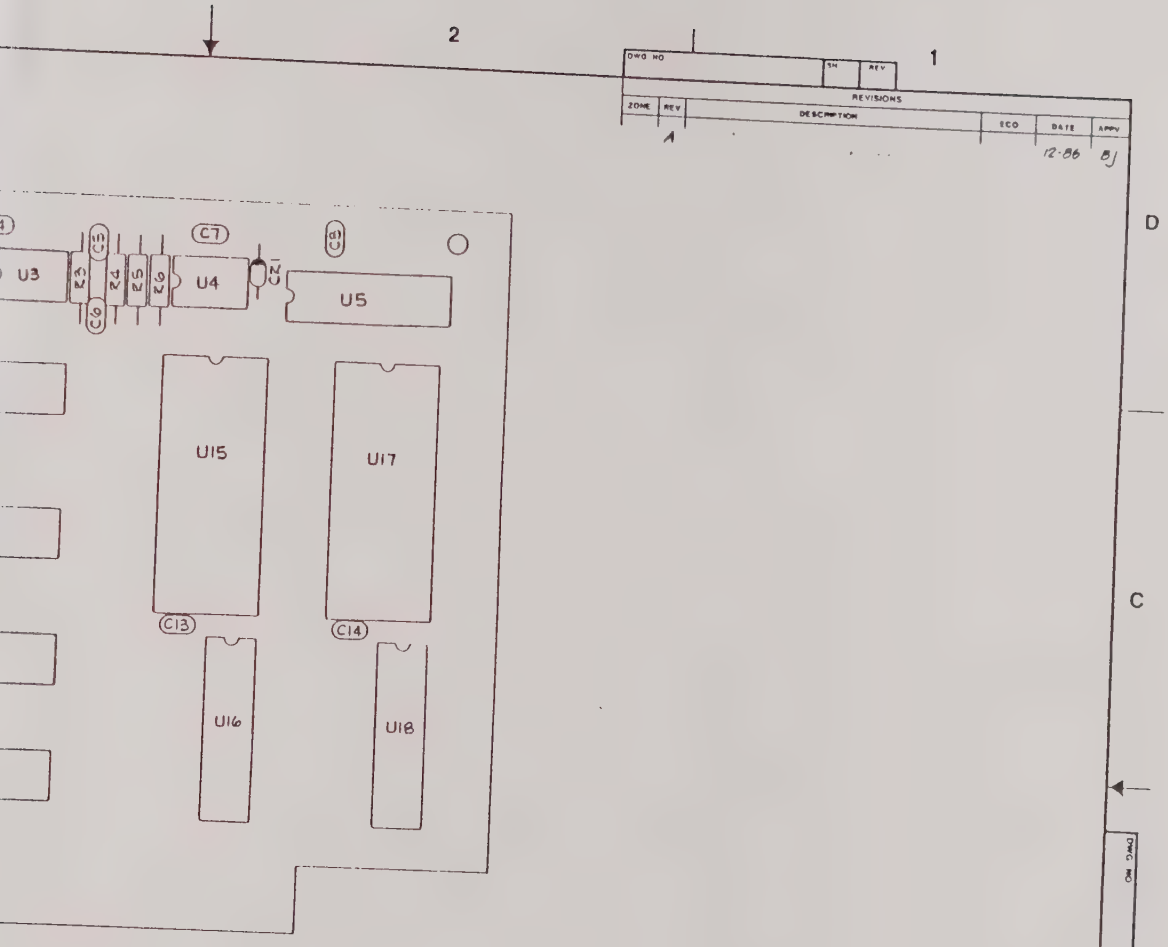

DWG NO	SH	REV

REVISIONS

ZONE	REV	DESCRIPTION	ECO	DATE	APPV
	A			12-86	BJ

QTY REQD	FSCM NO	PART OR IDENTIFYING NO	NOMENCLATURE OR DESCRIPTION	MATERIAL SPECIFICATION

PARTS LIST

UNLESS OTHERWISE SPECIFIED DIMENSIONS ARE IN INCHES
TOLERANCES ARE
FRACTIONS DECIMALS ANGLES
XX ±
XXX ±

MATERIAL

FINISH

NEXT ASSY | USED ON

910

APPLICATION

DO NOT SCALE DRAWING

CONTRACT NO

APPROVALS	DATE
DRAWN EM	2/86
CHECKED	
ENG GH	12/86
QA	

Giga-tronics

ANALOG SWEEP # 2

SIZE	FSCM NO	DWG NO	REV
C	58900	106CA03902	A

SCALE 2:1 SHEET 1 OF 2

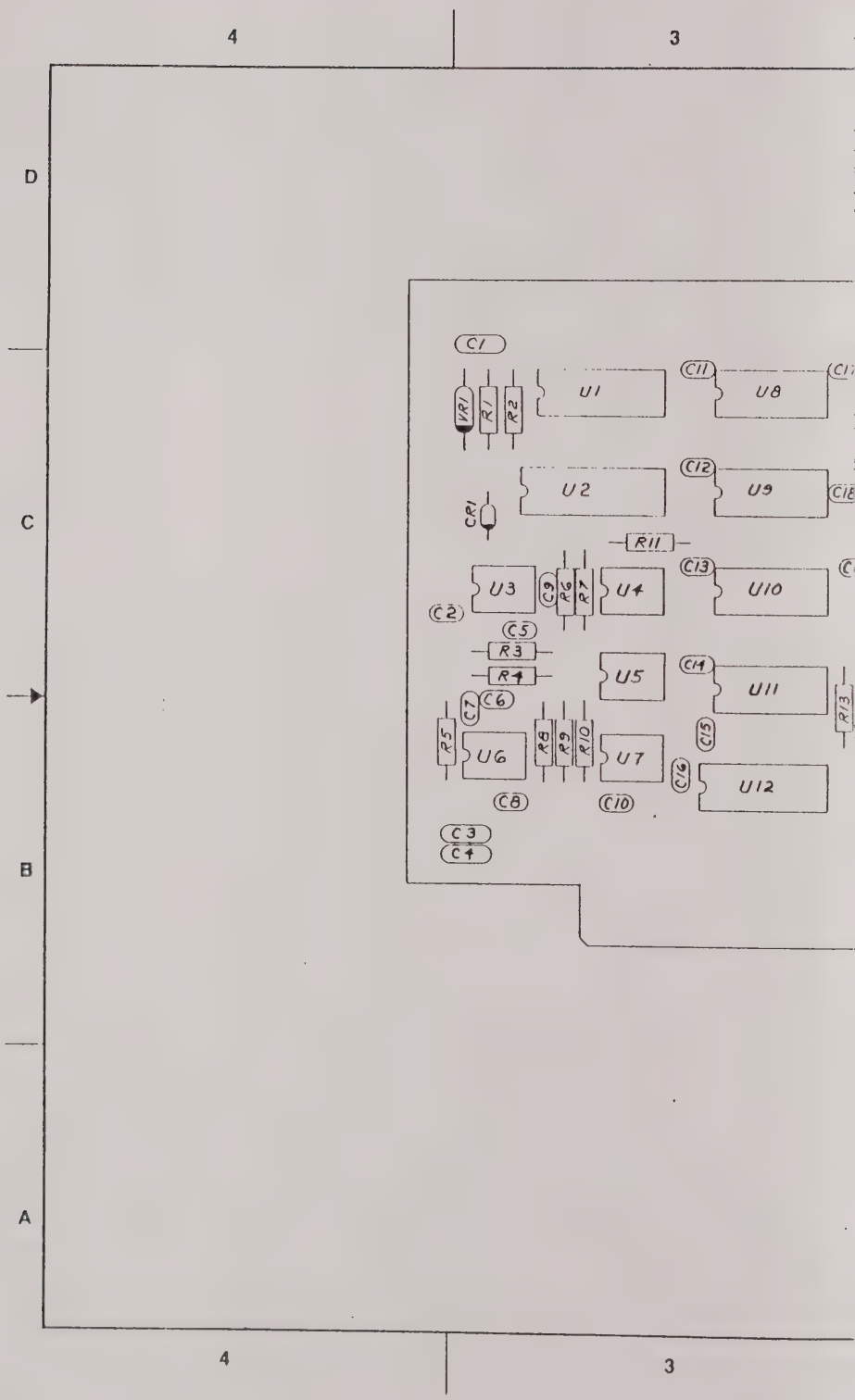
4
3
D
C
B
A
C1
VR1
R1
R2
U1
C11
U8
C12
U9
U2
CR1
R11
U3
C9
R6
R7
U4
C13
U10
C2
C5
R3
R4
U5
C14
U11
R13
C7
C6
R5
U6
R8
R9
R10
U7
C15
C16
U12
C8
C10
C3
C4

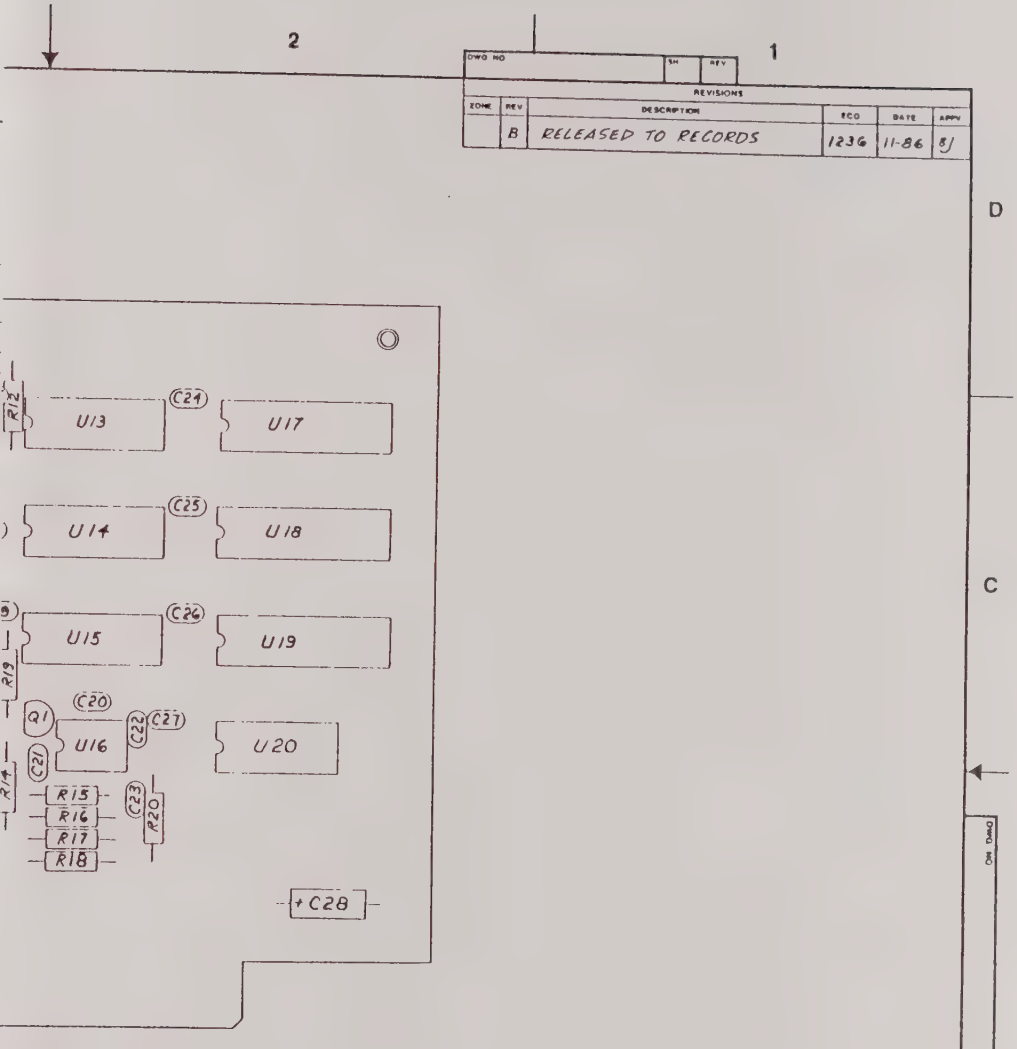

DWG NO	SH	REV

REVISIONS

ZONE	REV	DESCRIPTION	ECO	DATE	APPV
	B	RELEASED TO RECORDS	1236	11-86	BJ

QTY REQD	FSCM NO	PART OR IDENTIFYING NO	NOMENCLATURE OR DESCRIPTION	MATERIAL SPECIFICATION

PARTS LIST

UNLESS OTHERWISE SPECIFIED DIMENSIONS ARE IN INCHES
TOLERANCES ARE
FRACTIONS DECIMALS ANGLES
.XX ±
.XXX ±

MATERIAL

FINISH

DO NOT SCALE DRAWING

CONTRACT NO

APPROVALS	DATE
DRAWN KDN	11-86
CHECKED	
ENGR LAK	12-86
QA	

Gigatronics

ANALOG SWEEP #1

SIZE	FSCM NO	DWG NO	REV
C	58900	106CA03901	B

SCALE 2:1 SHEET 1 OF 2

	910
NEXT ASSY	USED ON
APPLICATION	

2 1

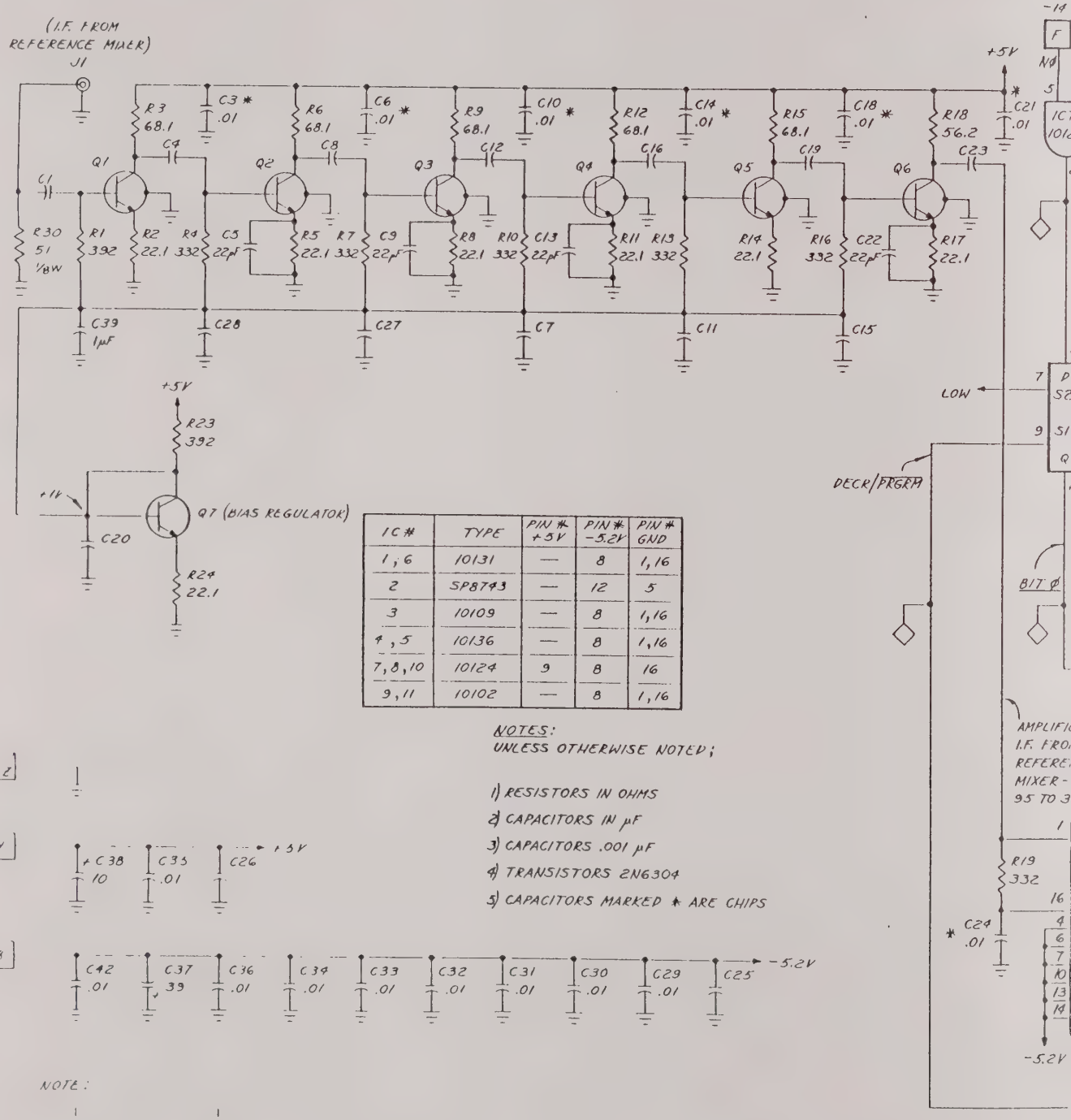

IC #	TYPE	PIN # +5V	PIN # -5.2V	PIN # GND
1, 6	10131	—	8	1, 16
2	SP8743	—	12	5
3	10109	—	8	1, 16
4, 5	10136	—	8	1, 16
7, 8, 10	10124	9	8	16
9, 11	10102	—	8	1, 16

NOTES:
UNLESS OTHERWISE NOTED;

1) RESISTORS IN OHMS
2) CAPACITORS IN μF
3) CAPACITORS .001 μF
4) TRANSISTORS 2N6304
5) CAPACITORS MARKED * ARE CHIPS

DWG NO

REVISIONS

ZONE	REV	DESCRIPTION	ECO	DATE	APPV
	J	REDRAWN		3/85	BJ
	K	DELETE C2, ADD R30	1248	2/86	BM

A2-[26]-

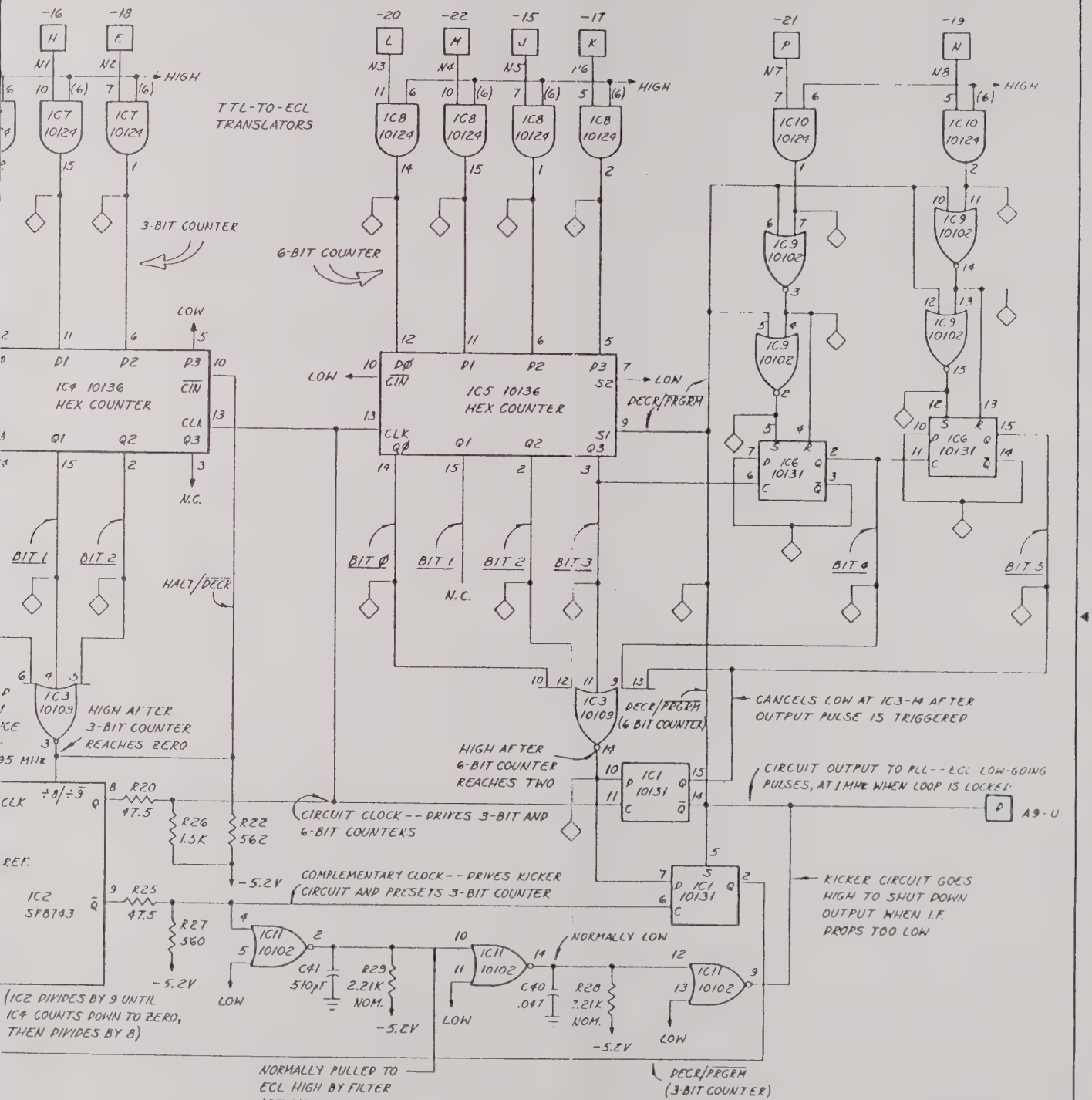

QTY REQD	FSCM NO	PART OR IDENTIFYING NO	NOMENCLATURE OR DESCRIPTION	MATERIAL SPECIFICATION

PARTS LIST

UNLESS OTHERWISE SPECIFIED DIMENSIONS ARE IN INCHES
TOLERANCES ARE:
FRACTIONS DECIMALS ANGLES
.XX
.XXX

MATERIAL

FINISH

DO NOT SCALE DRAWING

CONTRACT NO

APPROVALS	DATE
DRAWN R. PERL	10/84
CHECKED	
ENGR LAK	3/85
QA	

NEXT ASSY | USED ON

APPLICATION

Giga-tronics

DIVIDE BY "N" (A-20)

SIZE	FSCM NO	DWG NO	REV
D	58900	1010S06300	K

SCALE 1:1 SHEET 1 OF 1

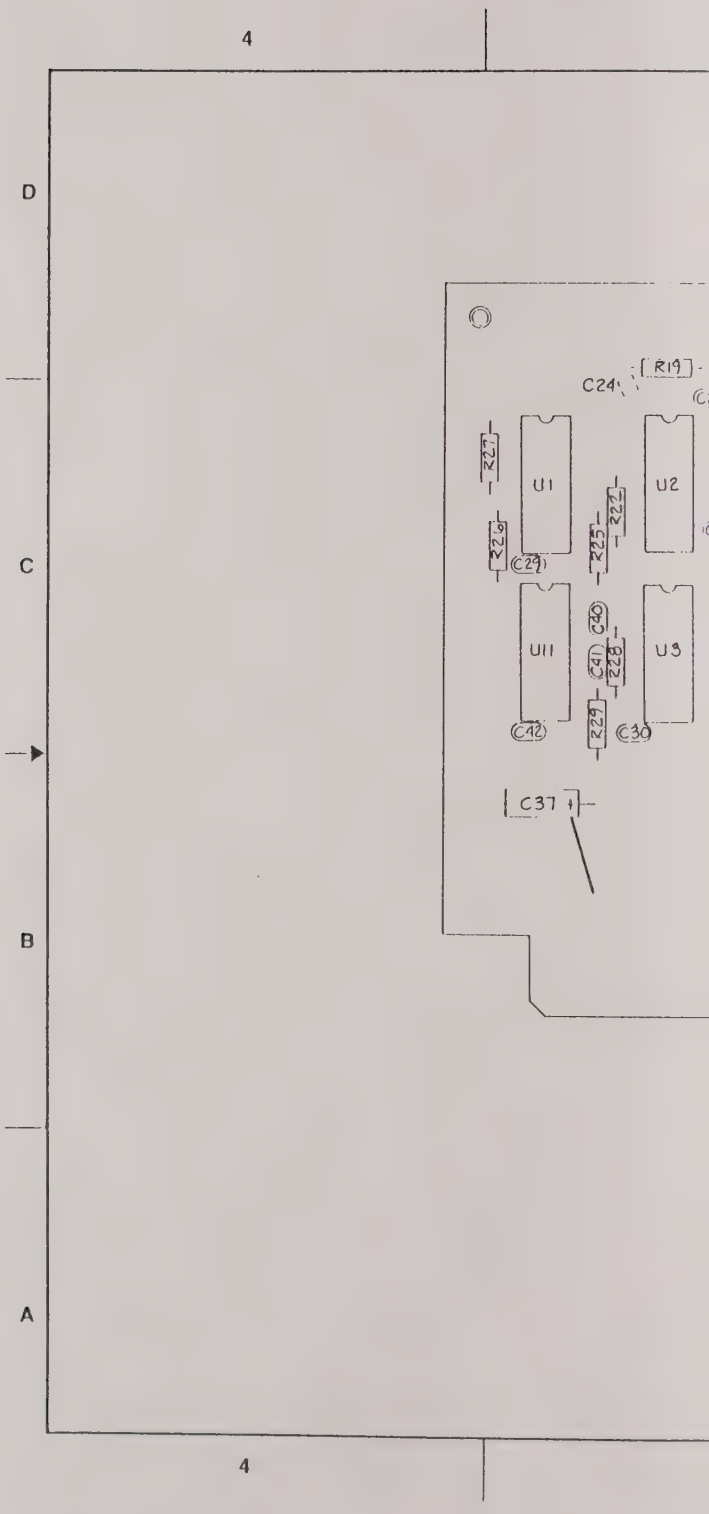
4
D
C
B
A
4
C24
R19
R27
U1
U2
R26
R25
R22
C29
U11
U3
C40
C41
R28
R29
C42
C30
C37

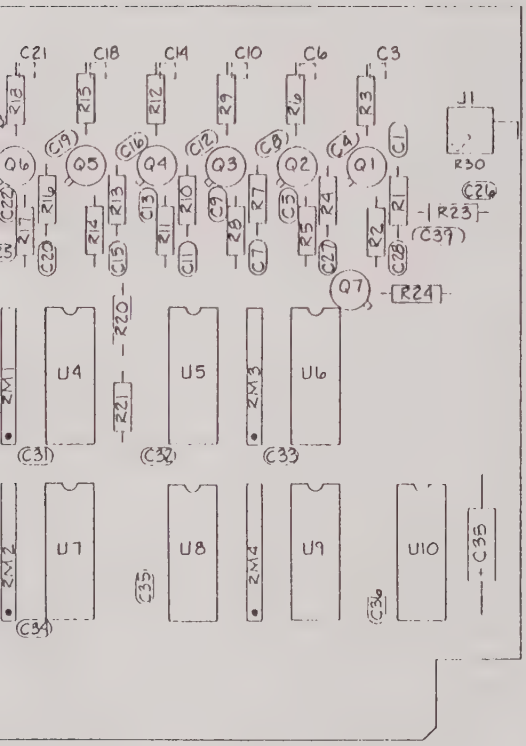

DWG NO	SH	REV

REVISIONS

ZONE	REV	DESCRIPTION	ECO	DATE	APPV
	J	ADD JUMPER	1192	4-86	BJ
	K	DELETE C2, ADD R30	1298	12,86	[illegible]

QTY REQD	FSCM NO	PART OR IDENTIFYING NO	NOMENCLATURE OR DESCRIPTION	MATERIAL SPECIFICATION

PARTS LIST

UNLESS OTHERWISE SPECIFIED DIMENSIONS ARE IN INCHES TOLERANCES ARE FRACTIONS DECIMALS ANGLES .xx .xxx

MATERIAL

FINISH

NEXT ASSY | USED ON

APPLICATION

DO NOT SCALE DRAWING

CONTRACT NO

APPROVALS	DATE
DRAWN CP	4-86
CHECKED	
ENG LAK	5-86
QA	

Giga tronics

DIVIDE BY N

SIZE C | FSCM NO 58900 | DWG NO 101CA06300 | REV K

SCALE 2:1 | SHEET 1 OF 2

DWG NO | SH | REV

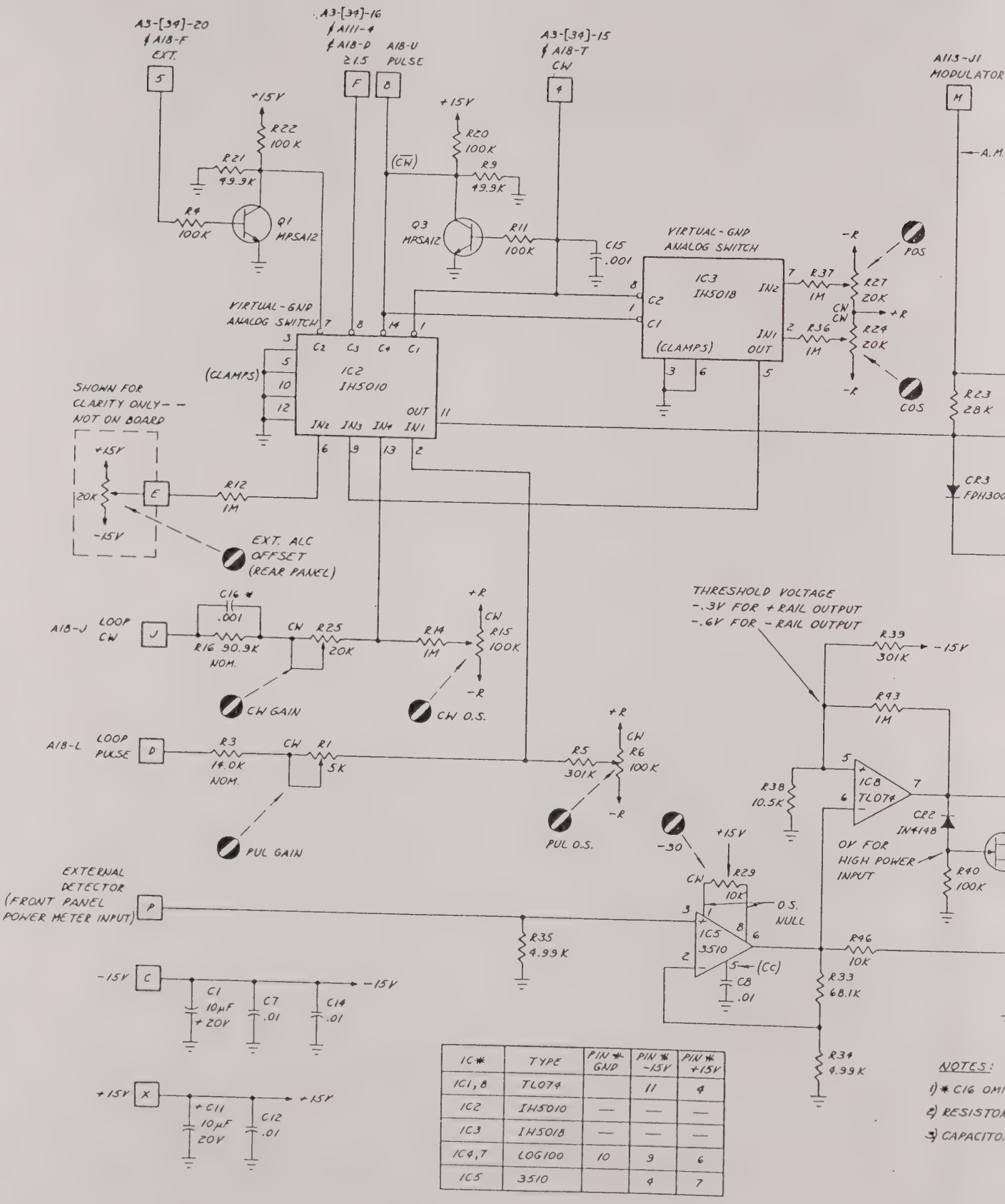

IC#	TYPE	PIN # GND	PIN # -15V	PIN # +15V
IC1,8	TL074		11	4
IC2	IH5010	—	—	—
IC3	IH5018	—	—	—
IC4,7	LOG100	10	9	6
IC5	3510		4	7

NOTES:
1) * C16 OMI
2) RESISTOR
3) CAPACITO

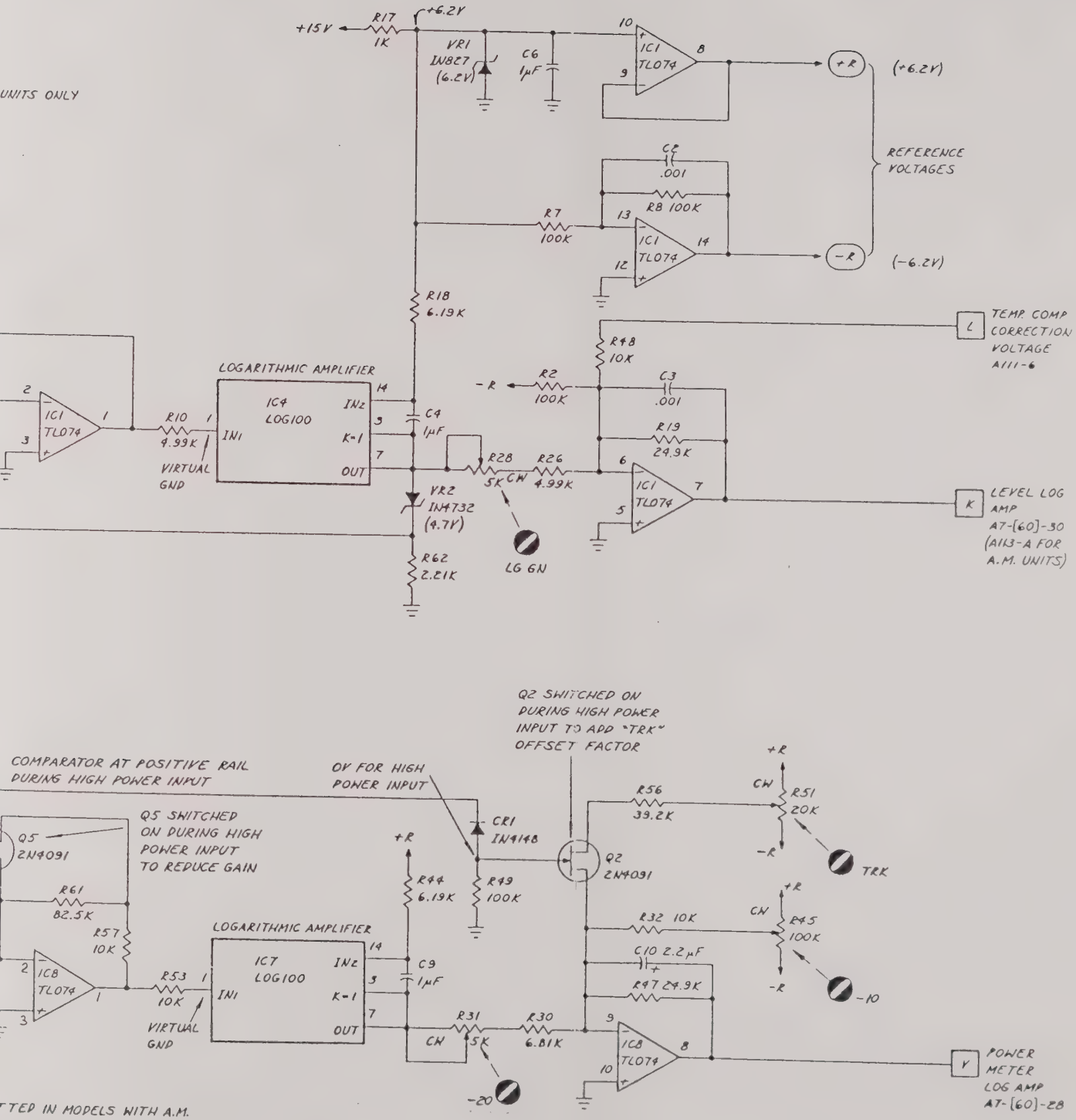

FIG: 7.A19.2
LEVELING LOG AMP PC ASSY (A19)
DWG# 101BM25600 SHT 2

REV F

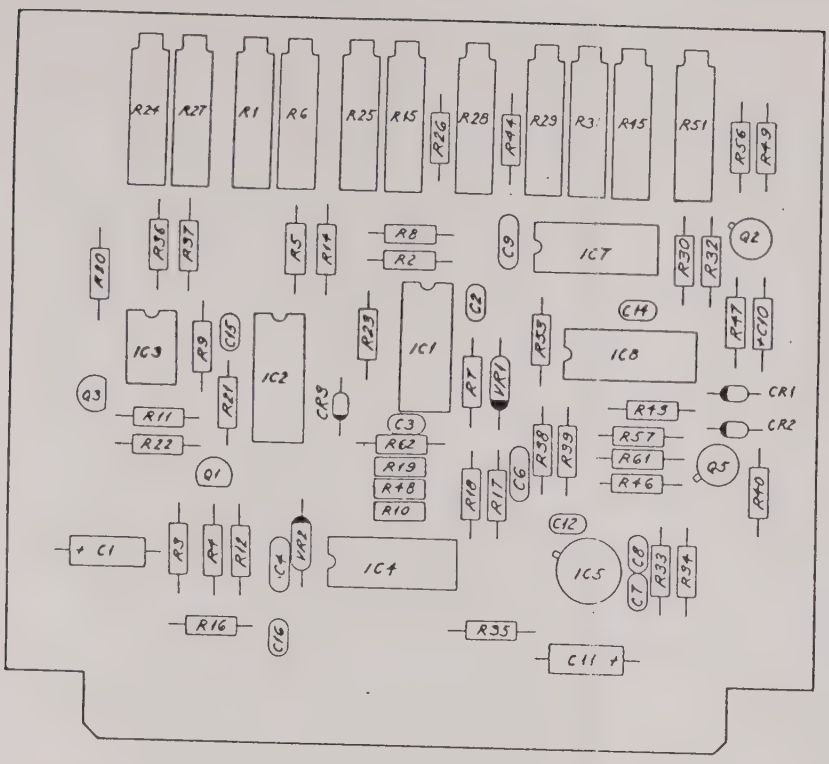

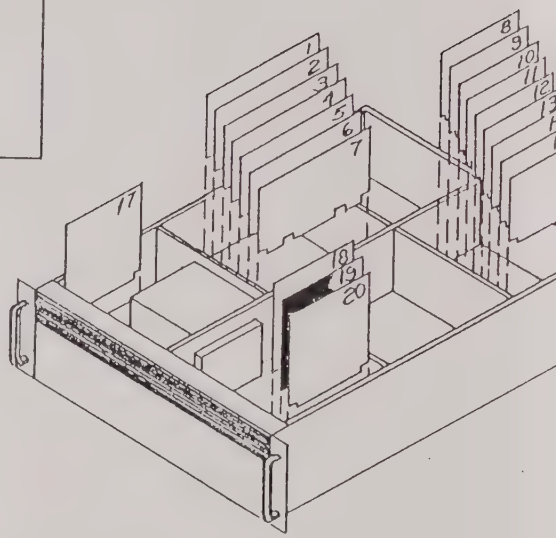

LEVELING LOG AMPLIFIERS--Circuit Board A19

GENERAL

This board includes two logarithmic amplifiers which are used to change the amplified signal from a detector to be linear in dB; one log amp conditions the CW and PULSE detector outputs from the leveling sampler board (A18) and one conditions the signal from the power meter input detector (after preliminary amplification at IC5 and IC8). A number of potentiometers permit gain and offset calibration. The system computer acts to compensate for the nonlinearity of detector response at higher power levels, but this correction is implemented elsewhere (see the AM Level Control circuit board, A7).

FIG: 7.A19.1
LEVELING LOG AMP PC ASSY (A19)
DWG# 101BM25600 SHT 1

REV F

LEVELING SYSTEM

The CW and PULSE detector signals from the leveling sampler board are received at pins J and D, conditioned by the gain and offset pots, and applied to inputs of the analog switch IC2. The other two inputs to the switch are offset voltages for External ALC (received at pin E) and for the low-frequency detector (received from IC3, another analog switch). More than one input to the switch can be active at once; the control lines at pins 5, F, 8 and 4 select the appropriate combination of inputs depending on whether the mode of operation is CW or pulse, internal ALC or external, high frequency or low (the transition between detectors occurs at 1.5 GHz).

The common output of IC2 is applied to the inverting input at IC1-2 (in units with A.M., a modulation signal from pin H is introduced at this point). The amplified and inverted signal (a positive voltage increasing with power) is applied to the input of the log amp IC4 through R10. The output of the log amp is a negative voltage which decreases as detected power increases. For very low detector voltages, such as may be encountered during calibration in the external ALC mode, IC4 can saturate with a large negative output and "lock up" the leveling loop. To protect against this, a 4.7V zener diode (VR2) feeds back the excessive negative voltage, via CR3, to IC1-2; this takes IC4 out of saturation.

Log amp gain is calibrated by R28. The output amplifier's input junction (IC1-6) sums the log amp output, a correction voltage from the detector temperature compensation board (A111), and a negative voltage reference. The output to the A7 board is a positive voltage, decreasing as detected power increases. The +6.2V reference used by the log amplifier (see VR1) is buffered by IC1-8 and IC1-14 to produce reference voltages of +6.2V and -6.2V ("+R" and "-R") for use by the offset adjustment circuits.

POWER METER SYSTEM

The signal received at pin P comes directly from the external power detector. In order to work over its 40 dB range, the log amp needs extra input gain when input power is low; this keeps the low-level voltage supplied to the log amp from being drowned by noise. Of course, a compensating factor is needed at the output, so that the extra gain (added only at low input levels) does not distort the meter's overall power response.

The detector signal is applied to a low-drift amplifier (IC5); pot R29, placed across the nulling pins of the amplifier, is used to calibrate the meter at the lowest input levels. The output (a negative voltage increasing with input power) goes to the input at IC8-9, and also is sent to the comparator input IC8-6. For power below a certain threshold, the comparator output goes negative to turn off Q5, increasing the gain of the input amplifier to the log amp. The transition varies with detectors; speaking very roughly, it is near -8 dBm. The input to the log amp (through R53) is a positive voltage increasing with input power; the output is a negative voltage decreasing as power increases. A gain pot (R31) and an offset reference (see R45) are used to calibrate the output, which is a positive voltage decreasing as power increases. In the low-gain mode, when input power is higher, Q2 is turned on by the comparator, adding the "TRK" offset voltage to the summing junction at IC8-9. This factor makes up for the loss of gain at the input stage.

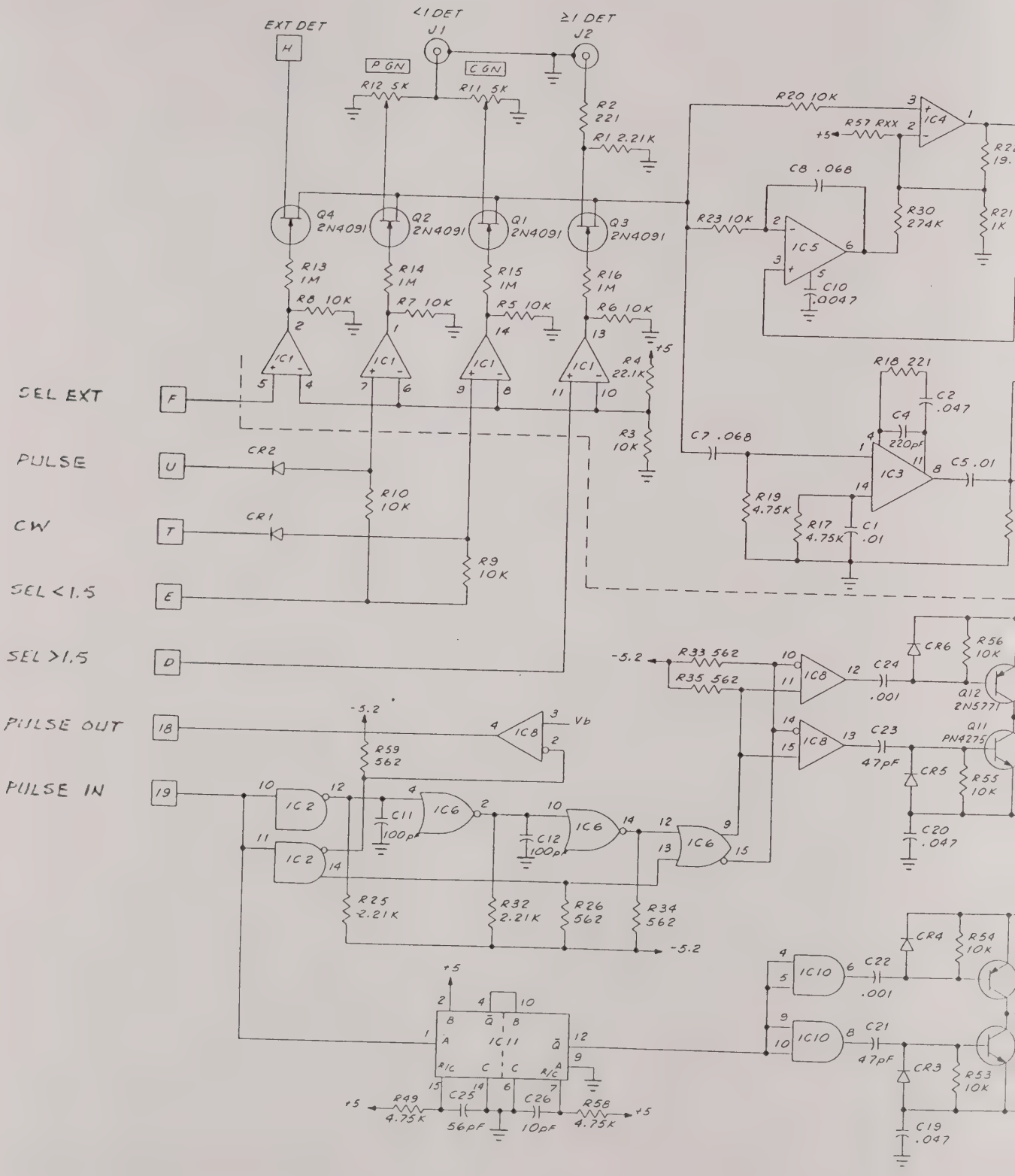
EXT DET
<1 DET
J1
≥1 DET
J2
PGN
CGN
R12 5K
R11 5K
R2 221
R1 2.21K
R20 10K
R57 RXX
+5
IC4
C8 .068
R30 274K
R23 10K
IC5
C10 .0047
Q4 2N4091
Q2 2N4091
Q1 2N4091
Q3 2N4091
R13 1M
R14 1M
R15 1M
R16 1M
R8 10K
R7 10K
R5 10K
R6 10K
IC1
R4 22.1K
R3 10K
SEL EXT
PULSE
CW
SEL <1.5
SEL >1.5
PULSE OUT
PULSE IN
F
U
T
E
D
18
19
CR2
CR1
R10 10K
R9 10K
R18 221
C2 .047
C4 220pf
C7 .068
IC3
C5 .01
R19 4.75K
R17 4.75K
C1 .01
-5.2
R33 562
R35 562
IC8
C24 .001
CR6
R56 10K
Q12 2N5771
C23 47pF
Q11 PN4275
CR5
R55 10K
C20 .047
R59 562
Vb
IC2
IC6
C11 100pF
C12 100pF
R25 2.21K
R32 2.21K
R26 562
R34 562
IC10
C22 .001
CR4
R54 10K
C21 47pF
CR3
R53 10K
C19 .047
IC11
R49 4.75K
C25 56pF
C26 10pF
R58 4.75K

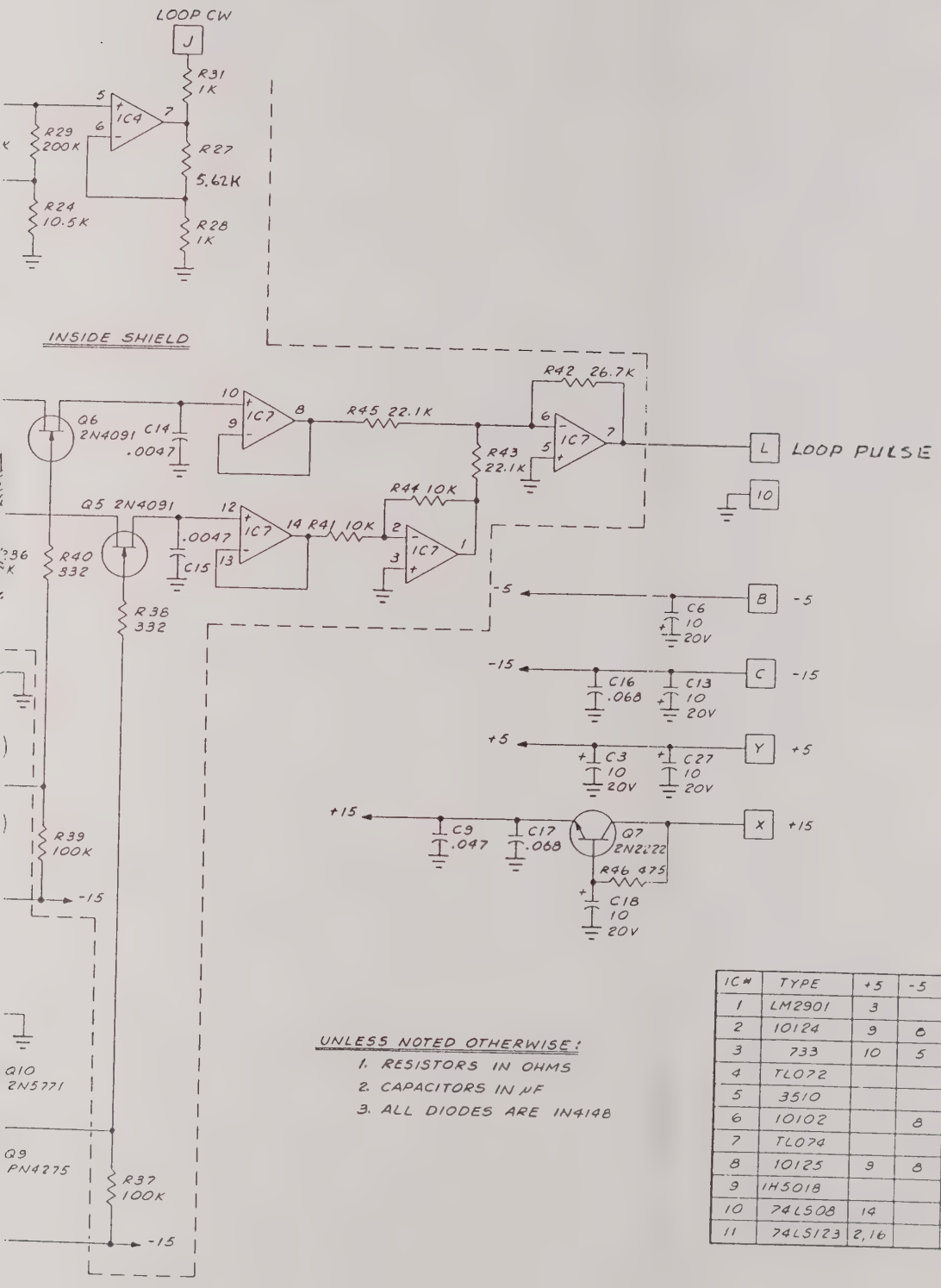

UNLESS NOTED OTHERWISE:

1. RESISTORS IN OHMS
2. CAPACITORS IN μF
3. ALL DIODES ARE IN4148

IC #	TYPE	+5	-5	GND	+15	-15
1	LM2901	3				12
2	10124	9	8	16		
3	733	10	5			
4	TL072				8	4
5	3510				7	4
6	10102		8	1,16		
7	TL074				4	11
8	10125	9	8	16		
9	IH5018					
10	74LS08	14		7		
11	74LS123	2,16		8		

FIG: 7.A18.2
LEVELING SAMPLER PC ASSY (A18)
DWG# 101BM25500 SHT 2

REV E

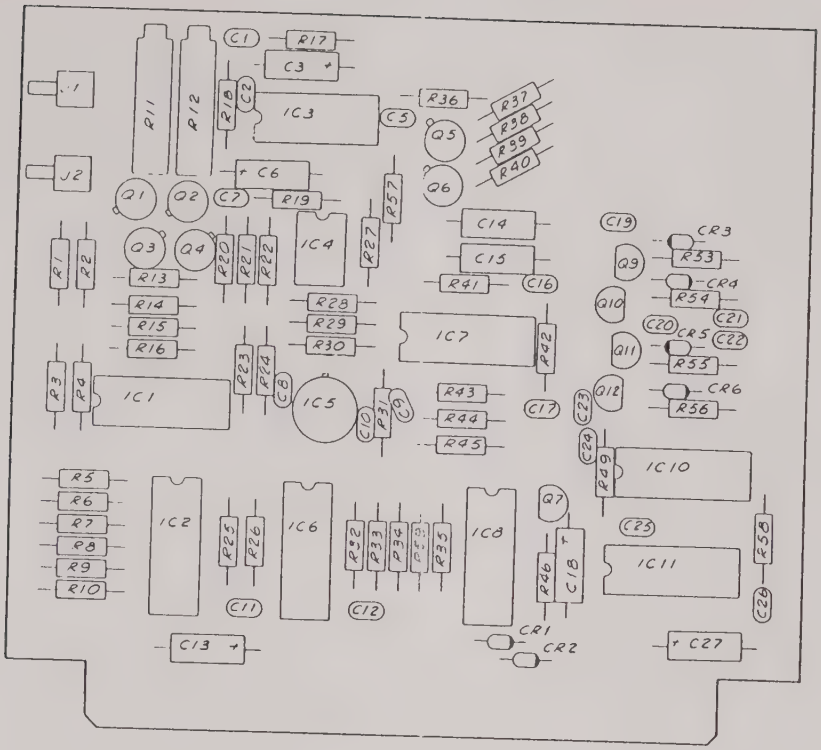

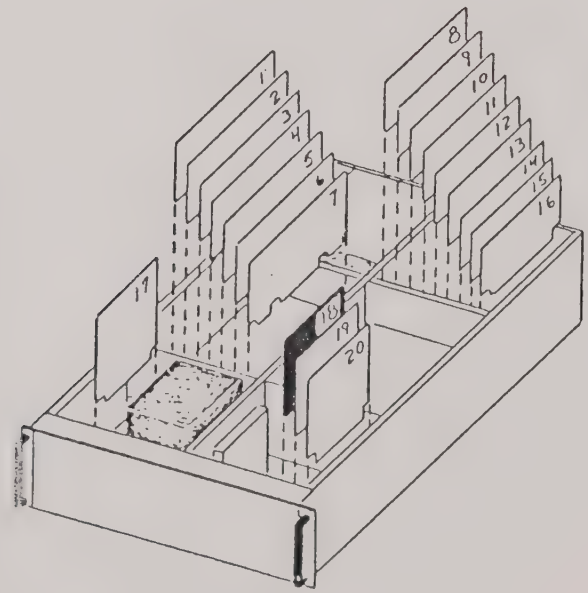

FIG: 7.A18.1
LEVELING SAMPLER PC ASSY (A18)
DWG# 101BM25500 SHT 1

REV E

LEVELLING SAMPLER - A18

General

The levelling sampler is designed to provide amplification of the levelling detector in both the CW and pulsed modes of operation. It also provides gain and offset adjustment for the two detectors.

Detector Switching

The section comprises four FET switches and their drivers. The external detector, the .1 to 1 GHz detector and the 1 to 26.5 GHz detector are selected via FETS Q1, Q2, Q3, and Q4. Each FET is driven by one part of IC1. This IC translates the TTL logic level to the -15V (off) and open circuit (on), levels required. The 1-26.5 GHz detector has about 10% attenuation (R1, R2) to allow the <1 GHz gain adjust (R11, R12) sufficient dynamic range.

CW Mode Amplifier

When operating in the CW mode (or with external ALC) a D.C. coupled amplifier IC4 and IC5 is used to provide detector amplification. IC4 provides high speed, with IC5 giving DC stabilization.

Pulse Mode Amplifier

The pulse (or squarewave) modulation mode requires a sampling system to produce the required DC level. In order to obtain sufficient gain while maintaining the pulse shape a video amplifier (IC3), operating AC coupled is used. The ouput of the amplifier is fed to two sampling gates (Q5 and Q6). IC2 and IC6 provide a delay in the modulating signal to allow the sampling pulse produced by IC8, Q11 and Q12 to occur just prior to the pulse edge. IC11, IC10, Q9, and Q12 provide a pulse just following the pulse edge.

Amplifier IC7 has two sections used as high impedance buffers for the sampling capacitors, the remaining to further amplify and combine the pulse and reference samples to yield a DC level proportional to the peak to peak pulse value.

Offset Switch

The two offset ranges, CGN and PGN are independently adjustable. IC9 is used to select which will be used. Transistor Q8 provides the CW signal.

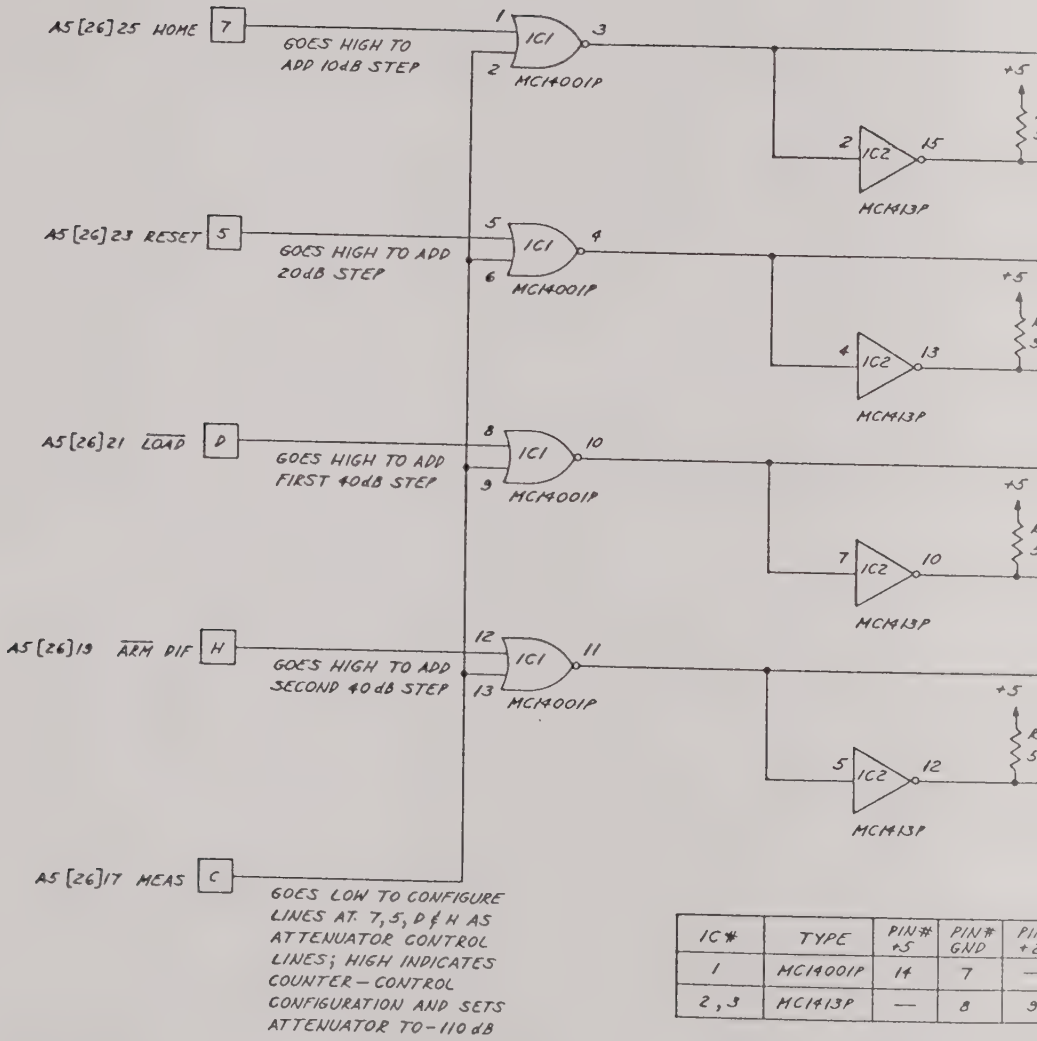

IC #	TYPE	PIN # +5	PIN # GND	PI +6
1	MC14001P	14	7	—
2, 3	MC1413P	—	8	9

NOTES:
UNLESS NOTED OTHERWISE;
1) RESISTORS IN OHMS
2) CAPACITORS IN μF

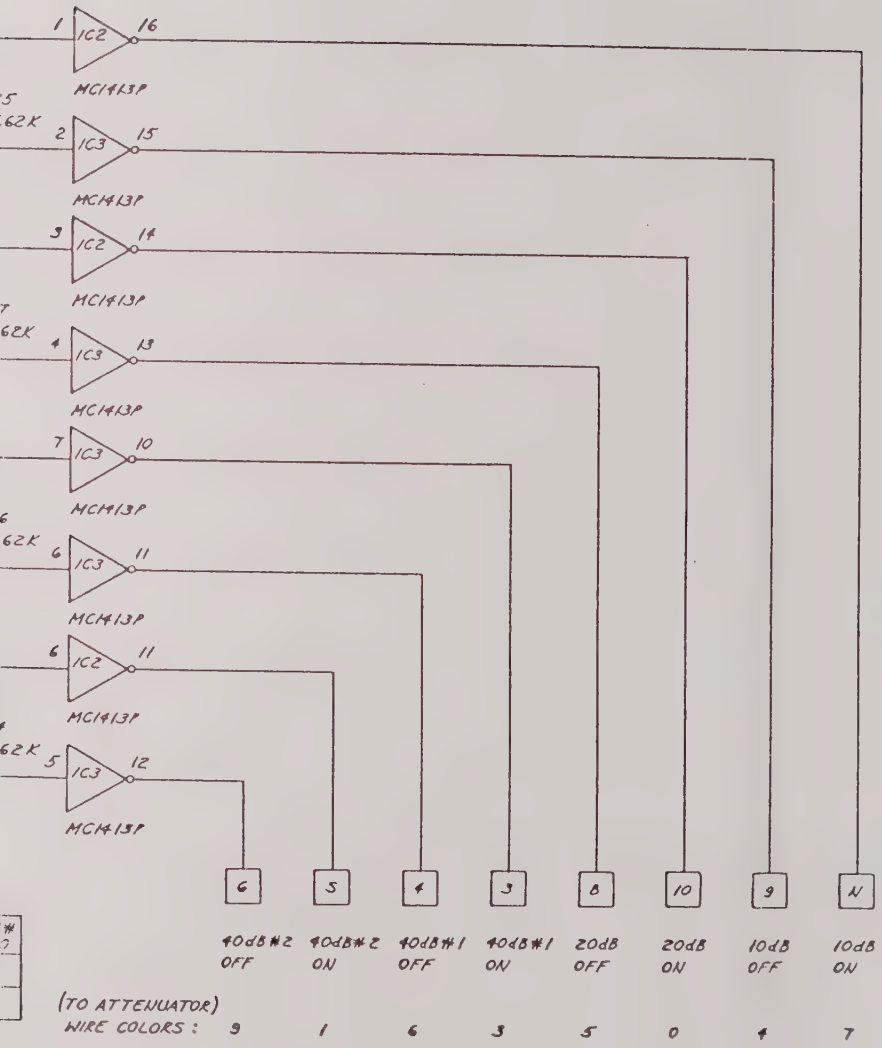

FIG: 7.A17.6
PULSE MODULATION PC ASSY (A17)
DWG# 101BM06600 SHT 6

NOTE:

This circuit board is used in different synthesizer models, including those models incorporating a frequency counter. The sharing of control lines between the attenuator and the counter, as described herein, is naturally not applicable to instruments that have no counter; nevertheless that control scheme is reflected in the circuit design, and is presented for the sake of clarity.

FIG: 7.A17.5
PULSE MODULATION PC ASSY (A17)
DWG# 101BM06600 SHT 5

REV G

STEP-ATTENUATOR RELAY DRIVER

This circuit is used to drive a multiple-relay 10 dB step attenuator. IC2 and IC3 are Darlington relay drivers, responding to TTL-level inputs and providing output levels of zero and ∿+30 volts (the approximate value of the unregulated +20 supply).

The group of control lines at pins 7, 5, D, H, and C can be configured for two independent and mutually exclusive functions. When "MEAS" (pin C) goes high, these become frequency-counter control lines. (The titles assigned to these lines refer to the counter application and not to the attenuator application.) Because the high at pin C is supplied to one input of each NOR gate (IC1), the output of each gate is driven low. Through the inverting drivers IC2/IC3, these low levels are used to activate all attenuator steps (the 10 dB, 20 dB, and the two 40 dB sections). This means that when the frequency counter is in use, the attenuator defaults to 110 dB of attenuation.

When the frequency counter is not in use, the control line "MEAS" (pin C) goes low; the control lines at 7, 5, D, and H can then be used to activate the individual attenuator steps. When one of these control lines goes high, the output of the associated NOR gate goes low and the low is applied through inverting drivers IC2/IC3 to activate the appropriate attenuator section. A low on one of the control lines causes the associated attenuator section to be deactivated. The sections can be combined as needed to yield a particular amount of attenuation, in 10 dB steps.

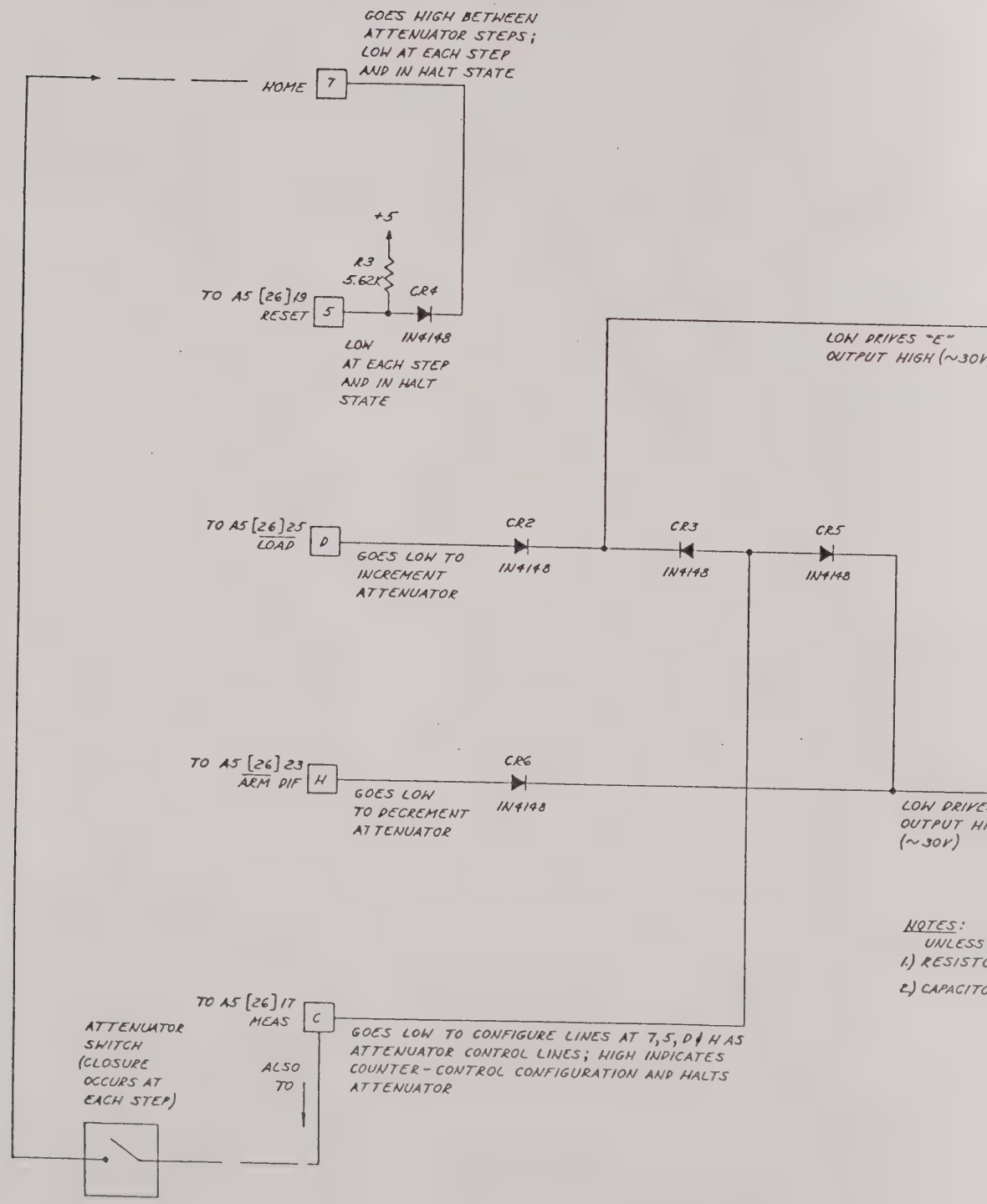
GOES HIGH BETWEEN ATTENUATOR STEPS; LOW AT EACH STEP AND IN HALT STATE
HOME
7
+5
R3
5.62K
CR4
TO A5 [26] 19
RESET
5
IN4148
LOW AT EACH STEP AND IN HALT STATE
LOW DRIVES "E" OUTPUT HIGH (~30V
TO A5 [26] 25
LOAD
D
GOES LOW TO INCREMENT ATTENUATOR
CR2
IN4148
CR3
IN4148
CR5
IN4148
TO A5 [26] 23
ARM DIF
H
GOES LOW TO DECREMENT ATTENUATOR
CR6
IN4148
LOW DRIVE
OUTPUT HI
(~30V)
NOTES:
UNLESS
1.) RESISTO
2.) CAPACITO
TO A5 [26] 17
MEAS
C
GOES LOW TO CONFIGURE LINES AT 7, 5, D & H AS ATTENUATOR CONTROL LINES; HIGH INDICATES COUNTER-CONTROL CONFIGURATION AND HALTS ATTENUATOR
ATTENUATOR SWITCH (CLOSURE OCCURS AT EACH STEP)
ALSO TO

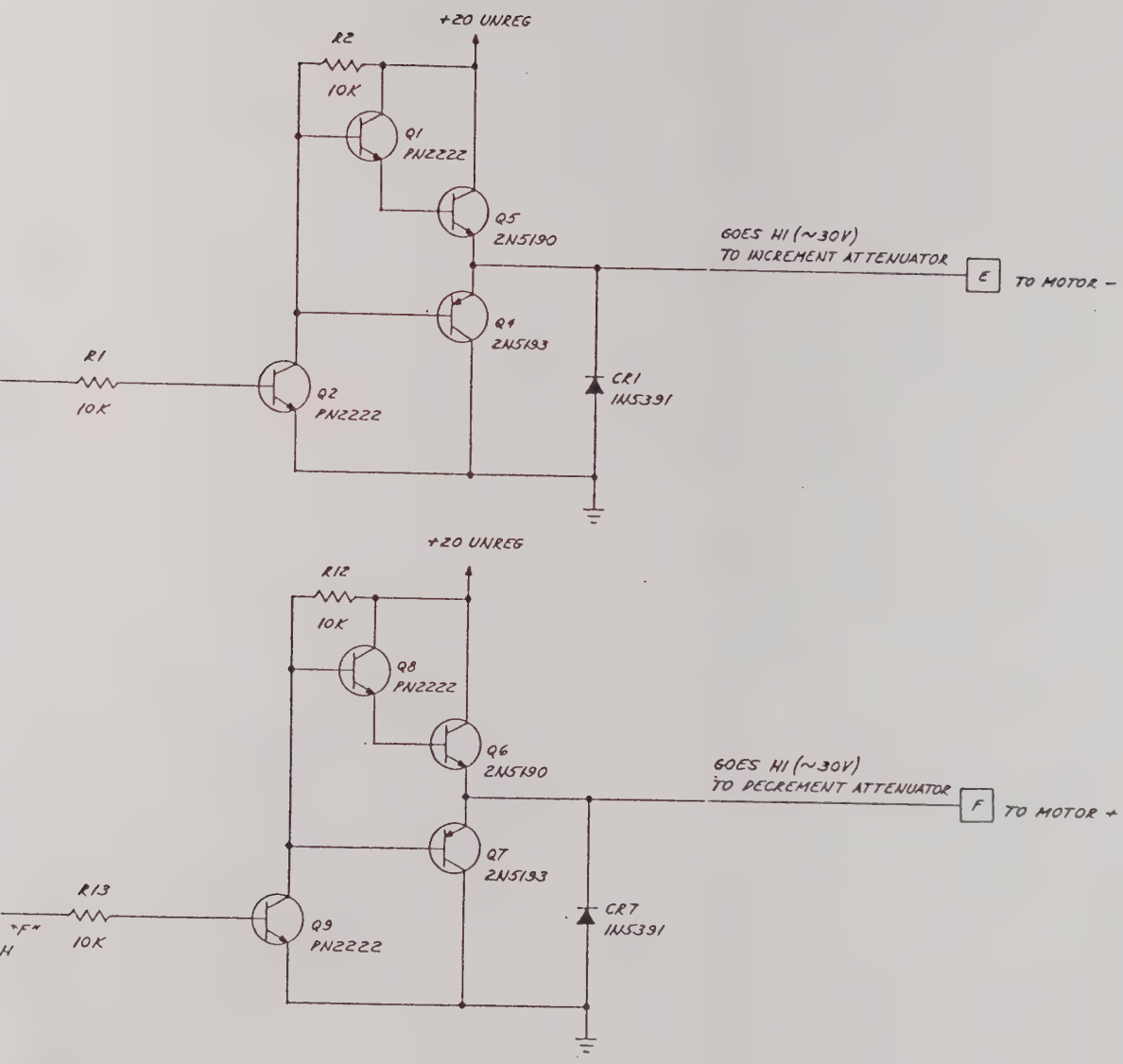

OTHERWISE NOTED;
RS IN OHMS
S IN μF

FIG: 7.A17.4
PULSE MODULATION PC ASSY (A17)
DWG# 101BM06600 SHT 4

SECTION EIGHT

OPTIONS

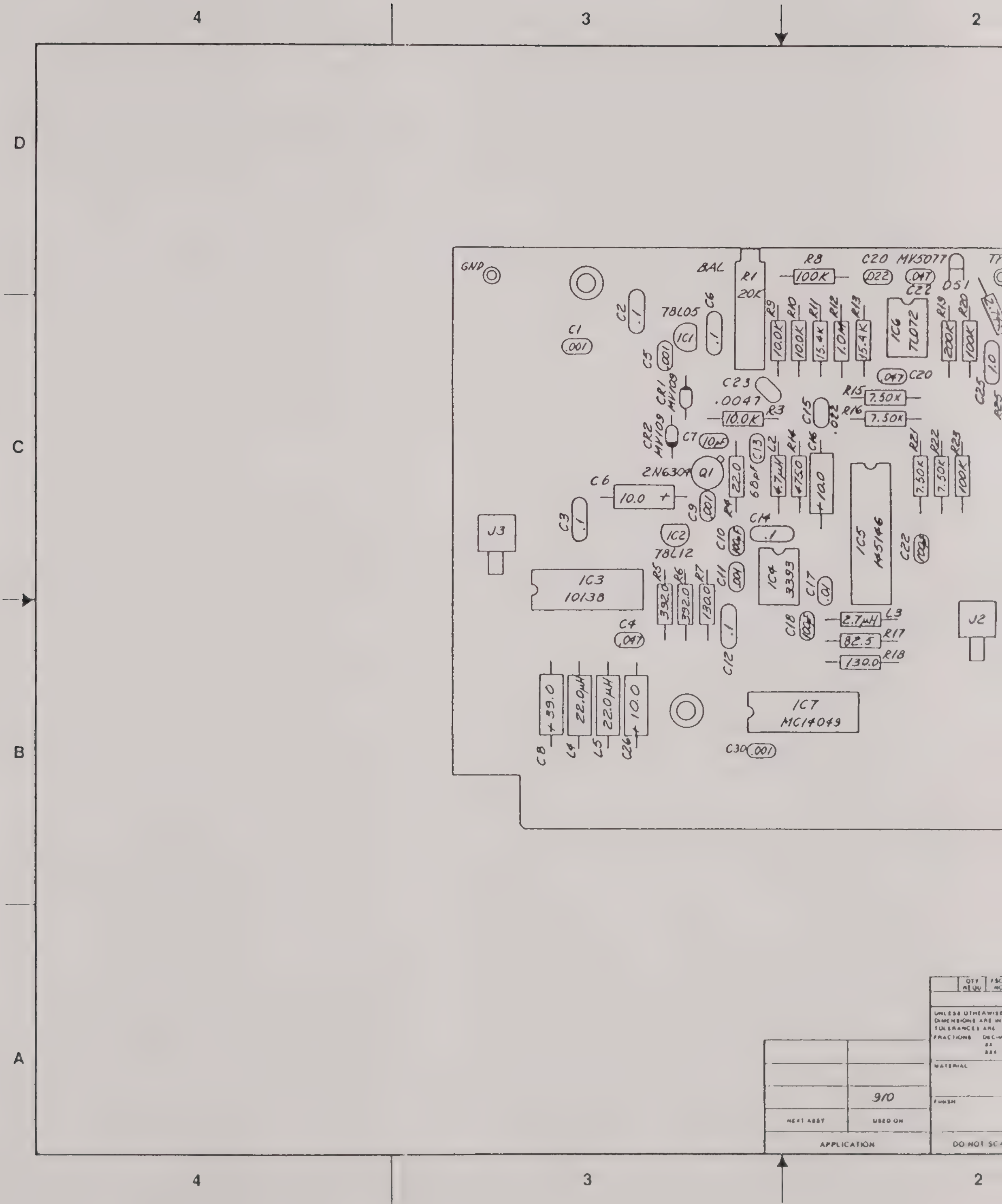
4
3
2
D
C
B
A
GND
BAL
R1
20K
R8
100K
C20 MV5077
.022
.047
DS1
C22
78L05
IC1
C1
.001
C2
.1
C6
.1
C5
.001
R9 10.0K
R10 10.0K
R11 15.4K
R12 1.0M
R13 15.4K
IC6
TL072
R19 200K
R20 100K
C23
.0047
R3
10.0K
CR1 MV109
CR2 MV109
C7 10pF
C15 .022
R15 7.50K
R16 7.50K
.047 C20
C25 1.0
2N6304
Q1
22.0
68pF
C13
L2 4.7μH
R14 47.50
C16 10.0
R21 7.50K
R22 7.50K
R23 100K
C6
10.0
C9 .001
R4
C14 .1
J3
C3 .1
IC2
78L12
C10
C11 .001
IC4 3393
C17 .01
IC5
MC145146
C22
IC3
10138
R5 392.0
R6 392.0
R7 130.0
C4
.047
C12 .1
C18
2.7μH L3
82.5 R17
130.0 R18
J2
C8 39.0
L4 22.0μH
L5 22.0μH
C26 10.0
IC7
MC14049
C30 .001
910
NEXT ASSY
USED ON
APPLICATION
QTY REQD
UNLESS OTHERWISE
MATERIAL
FINISH
DO NOT SC

DWG NO	SH	REV

REVISIONS

ZONE	REV	DESCRIPTION	ECO	DATE	APPV
	B	RELEASED TO RECORDS		3/85	BJ
	C	VALUE CHANGES SEE ECO	1164	9-85	BJ

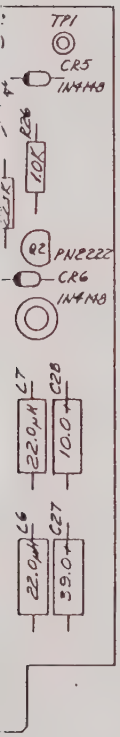

NOTES:
UNLESS NOTED OTHERWISE;
1) RESISTORS IN OHMS
2) CAPACITORS IN µF

DWG NO
SH
REV

PART OR IDENTIFYING NO	NOMENCLATURE OR DESCRIPTION	MATERIAL SPECIFICATION

PARTS LIST

CONTRACT NO

APPROVALS		DATE
DRAWN	R. PERL	12/84
CHECKED		
ENG	LAK	3/85
QA		

Giga-tronics

HI RESOLUTION PLL

SIZE	FSCM NO	DWG NO	REV
C	58900	101CA30201	C

SCALE 2:1 SHEET 1 of 1

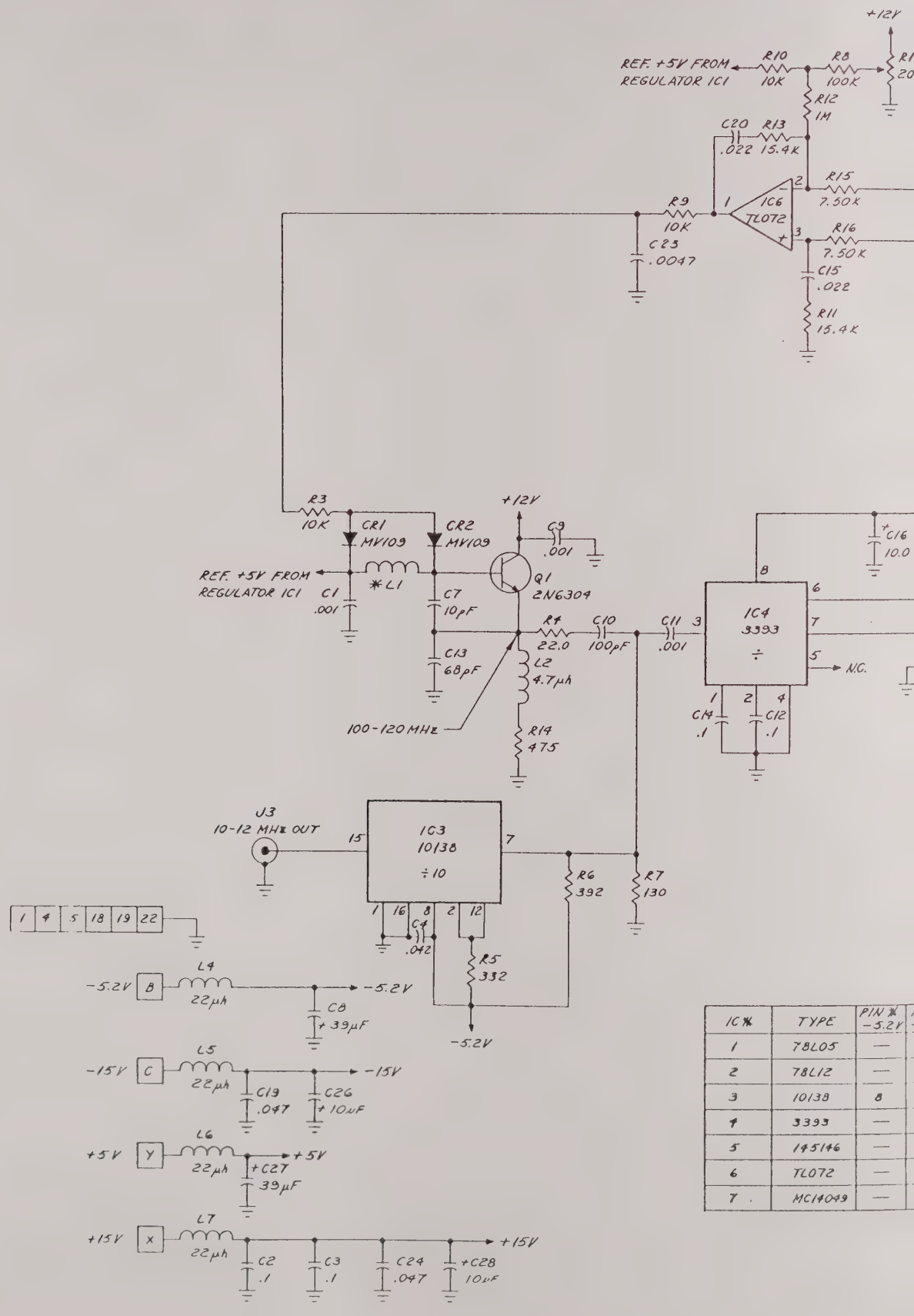

IC #	TYPE	PIN # -5.2V
1	78L05	—
2	78L12	—
3	10138	8
4	3393	—
5	145146	—
6	TL072	—
7	MC14049	—

REVISIONS					
ZONE	REV	DESCRIPTION	ECO	DATE	APPV
	B			3-85	BJ
	C	VALUE CHANGE, SEE ECO	1164	9-85	BJ

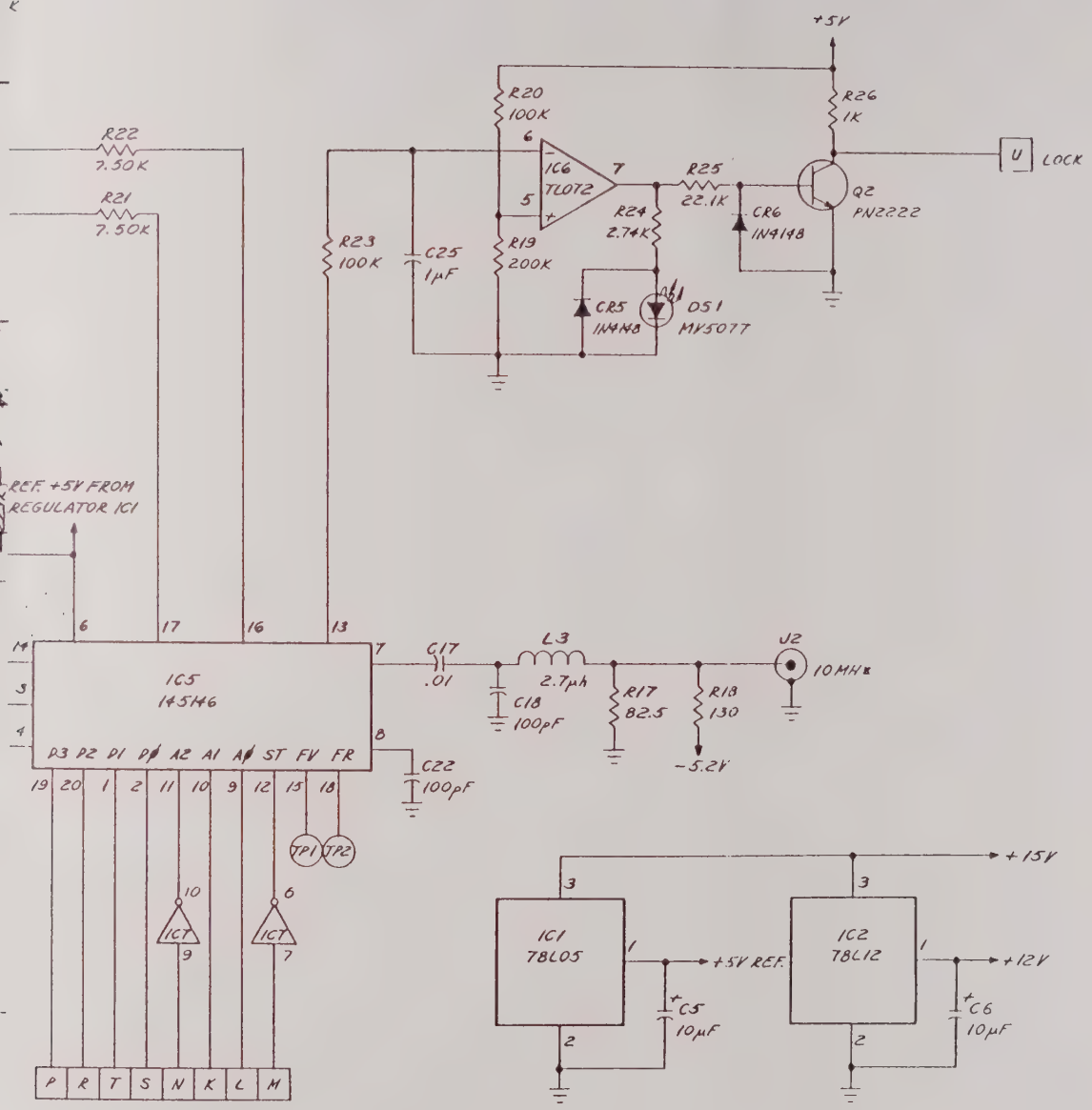

PIN # 15V	PIN # +5V	PIN # +15V	PIN # GND
—	—	—	—
—	—	—	—
—	—	—	—
—	—	—	—
—	—	—	—
—	—	—	—
*	—	8	—
—	1	—	8

NOTES:
UNLESS NOTED OTHERWISE;
1.) RESISTORS IN OHMS
2.) CAPACITORS IN μF
3.) * COIL IS PART OF P.C.

QTY REQD	FSCM NO	PART OR IDENTIFYING NO	NOMENCLATURE OR DESCRIPTION	MATERIAL SPECIFICATION

PARTS LIST

UNLESS OTHERWISE SPECIFIED DIMENSIONS ARE IN INCHES TOLERANCES ARE FRACTIONS DECIMALS ANGLES .XX ±.XXX

MATERIAL

FINISH

DO NOT SCALE DRAWING

CONTRACT NO

APPROVALS	DATE
DRAWN R. PERL	12/84
CHECKED	
ENG. L.DK	1/85
QA	

Giga-tronics

HI RESOLUTION PLL

SIZE	FSCM NO	DWG NO	REV
D	58900	1010S30201	C

SCALE ~ SHEET 1 OF 1

NEXT ASSY	USED ON
APPLICATION	

Parts List for HI RESOLUTION PLL ASSY No. 101CA30201 Rev. D

Item		Part Number	Qty	FSCM	Mfr's Part Number	Description
	1	101CF30201	1	58900	101CF30201	HI RESOLUTION PLL BD
	2	ETST-06224	3	88245	1280B	TURRET TERMINAL
C	1	CC50-02100	1	52763	EDPT-1000-Y5P10%	.001 UF CERAMIC Y5P
C	2	CC50-04100	1	56289	2CZ5U104X0050C4	.1 UF CERAMIC Z5U
C	3	CC50-04100	1	56289	2CZ5U104X0050C4	.1 UF CERAMIC Z5U
C	4	CC50-03470	1	51642	150-100-W5R-473	.047 UF CERAMIC X7R
C	5	CT20-06100	1	56289	150D106X9020B2	10 UF 20V TANTALUM
C	6	CT20-06100	1	56289	150D106X9020B2	10 UF 20V TANTALUM
C	7	CC50-00100	1	51642	100-100-COG-100J	10 PF CERAMIC NPO
C	8	CT10-06390	1	56289	150D396X9010B2	39 UF 10V TANTALUM
C	9	CC50-02100	1	52763	EDPT-1000-Y5P10%	.001 UF CERAMIC Y5P
C	10	CC50-01100	1	51642	150-100-COG-101J	100 PF CERAMIC NPO
C	11	CC50-02100	1	52763	EDPT-1000-Y5P10%	.001 UF CERAMIC Y5P
C	12	CC50-04100	1	56289	2CZ5U104X0050C4	.1 UF CERAMIC Z5U
C	13	CC50-00680	1	51642	150-100-COG-680J	68 PF CERAMIC NPO
C	14	CC50-04100	1	56289	2CZ5U104X0050C4	.1 UF CERAMIC Z5U
C	15	CC50-03220	1	51642	150-100-W5R-223K	.022 UF CERAMIC X7R
C	16	CT20-06100	1	56289	150D106X9020B2	10 UF 20V TANTALUM
C	17	CC50-03100	1	51642	150-100-W5R-103K	.01 UF CERAMIC X7R
C	18	CC50-01100	1	51642	150-100-COG-101J	100 PF CERAMIC NPO
C	19	CC50-03470	1	51642	150-100-W5R-473	.047 UF CERAMIC X7R
C	20	CC50-03220	1	51642	150-100-W5R-223K	.022 UF CERAMIC X7R
C	22	CC50-01100	1	51642	150-100-COG-101J	100 PF CERAMIC NPO
C	23	CC50-02470	1	51642	200-100-W5R-472K	.0047 UF CERAMIC X7R
C	24	CC50-03470	1	51642	150-100-W5R-473	.047 UF CERAMIC X7R
C	25	CC50-05100	1	56289	3CZ5U105X0050C5	1 UF CERAMIC Z5U
C	26	CT10-06390	1	56289	150D396X9010B2	39 UF 10V TANTALUM
C	27	CT10-06390	1	56289	150D396X9010B2	39 UF 10V TANTALUM
C	28	CT10-06390	1	56289	150D396X9010B2	39 UF 10V TANTALUM
C	31	CC50-01220	1	51642	150-100-COG-221	220 PF CERAMIC NPO
CR	1	DVA0-00109	1	04713	MV109	MV109 6-30 PF DIODE
CR	2	DVA0-00109	1	04713	MV109	MV109 6-30 PF DIODE
CR	5	DSA0-04148	1	07263	1N4148	IN4148 G.P. DIODE
CR	6	DSA0-04148	1	07263	1N4148	IN4148 G.P. DIODE
DS	1	ILRR-00125	1	58361	MV5077B	RED LED 1/8" DIA
IC	1	URP0-78050	1	04713	MC78L05	MC78L05 .1A 5V REG
IC	2	URP0-78120	1	04713	MC78L12CP	MC78L12CP .1A 12V REG
IC	3	UEN0-10138	1	04713	MC10138P	MC10138P BI-QUINARY CTR
IC	4	UIN0-03393	1	04713	MC3393P	MC3393P 40MHZ 15/16 CTR
IC	5	UCN0-51460	1	04713	MC145146P	MC145146P FREQ SYNTH
IC	6	UON0-00072	1	01295	TL072CP	TL072CP DUAL FET OP AMP
IC	7	UCN0-00490	1	04713	MC14049UBCP	MC14049UBCP HEX INV BUFR
J	2	JRBM-00101	1	98291	51-053-0000	SMB M RTANG PC MOUNT
J	3	JRBM-00101	1	98291	51-053-0000	SMB M RTANG PC MOUNT
L	2	LAD0-05470	1	72259	WEE-4.7	4.7 UH INDUCTOR
L	3	LAD0-05270	1	72259	WEE-2.7	2.7 UH INDUCTOR
L	4	LAD0-06220	1	72259	WEE-22	22 UH INDUCTOR
L	5	LAD0-06220	1	72259	WEE-22	22 UH INDUCTOR
L	6	LAD0-06220	1	72259	WEE-22	22 UH INDUCTOR
L	7	LAD0-06220	1	72259	WEE-22	22 UH INDUCTOR
L	8	LAD0-04330	1	72259	WEE-.33	.33 UH INDUCTOR

Parts List for HI RESOLUTION PLL ASSY No. 101CA30201 Rev. D

Item	Part Number	Qty	FSCM	Mfr's Part Number	Description
L 9	LAD0-04330	1	72259	WEE-.33	.33 UH INDUCTOR
Q 1	QBNS-06304	1	04713	2N6304	2N6304 15V 1400MHZ NPN
Q 2	QBNS-02222	1	27014	PN2222	PN2222 .5A 30V NPN
R 1	RAPD-22000	1	73138	89PR20K	20K POT 15T PC MNT
R 3	RN55-21000	1	05905	SMA 0207 E 96	10 K OHMS 1% MET FILM
R 4	RC05-00220	1	01121	BB-220-5	22 OHMS 5% 1/8W CARBON
R 5	RN55-03320	1	05905	SMA 0207 E 96	332 OHMS 1% MET FILM
R 6	RN55-03920	1	05905	SMA 0207 E 96	392 OHMS 1% MET FILM
R 7	RN55-01300	1	05905	SMA 0207 E 96	130 OHMS 1% MET FILM
R 8	RN55-31000	1	05905	SMA 0207 E 96	100 K OHMS 1% MET FILM
R 9	RN55-21000	1	05905	SMA 0207 E 96	10 K OHMS 1% MET FILM
R 10	RN55-21000	1	05905	SMA 0207 E 96	10 K OHMS 1% MET FILM
R 11	RN55-21540	1	05905	SMA 0207 E 96	15.4 K OHMS 1% MET FILM
R 12	RN55-41000	1	05905	SMA 0207 E 96	1 M OHMS 1% MET FILM
R 13	RN55-21540	1	05905	SMA 0207 E 96	15.4 K OHMS 1% MET FILM
R 14	RN55-04750	1	05905	SMA 0207 E 96	475 OHMS 1% MET FILM
R 15	RN55-17500	1	05905	SMA 0207 E 96	7.5 K OHMS 1% MET FILM
R 16	RN55-17500	1	05905	SMA 0207 E 96	7.5 K OHMS 1% MET FILM
R 17	RN55-00825	1	05905	SMA 0207 E 96	82.5 OHMS 1% MET FILM
R 18	RN55-01300	1	05905	SMA 0207 E 96	130 OHMS 1% MET FILM
R 19	RN55-32000	1	05905	SMA 0207 E 96	200 K OHMS 1% MET FILM
R 20	RN55-31000	1	05905	SMA 0207 E 96	100 K OHMS 1% MET FILM
R 21	RN55-17500	1	05905	SMA 0207 E 96	7.5 K OHMS 1% MET FILM
R 22	RN55-17500	1	05905	SMA 0207 E 96	7.5 K OHMS 1% MET FILM
R 23	RN55-31000	1	05905	SMA 0207 E 96	100 K OHMS 1% MET FILM
R 24	RN55-12740	1	05905	SMA 0207 E 96	2.74 K OHMS 1% MET FILM
R 25	RN55-22210	1	05905	SMA 0207 E 96	22.1 K OHMS 1% MET FILM
R 26	RN55-11000	1	05905	SMA 0207 E 96	1 K OHMS 1% MET FILM
R 27	RN55-05620	1	05905	SMA 0207 E 96	562 OHMS 1% MET FILM

Option 06: HIGH STABILITY TIME BASE

This option replaces the standard (10E-6/year) master reference oscillator (TCXO Assy 101BA09700) with a high stability time base (10E-9/day; part number 101AC20501).

Option 08: +8 dBm Output Power

This option increases the maximum leveled output power of signal generators that normally provide +3 dBm output power. It is implemented by substituting specially designed high power YIG oscillators for the standard YIG oscillators normally supplied. These high powered oscillators are capable of increasing available output power by approximately 5 dBm.

Option 08 provides maximum leveled output power of +8 dBm (nominal) at all output frequencies above 2 GHz, over a temperature range of +15°C to +35°C. Typically, maximum leveled output power will be >+9 dBm throughout this frequency range. There may, however, be one or more frequencies at which available power is slightly less than the nominal value, due to the characteristics of the particular high powered YIG oscillator involved. Output power at these frequencies is always >+6 dBm. Plots of the maximum available output power and the leveled output from a typical 18 GHz instrument with Option 08 are shown below. A plot of maximum available output power is supplied with each instrument.

NOTE: The instrument's harmonic specification (<-55 dBc at 0 dBm, CW mode) may degrade at outputs >0 dBm when Option 08 is installed.

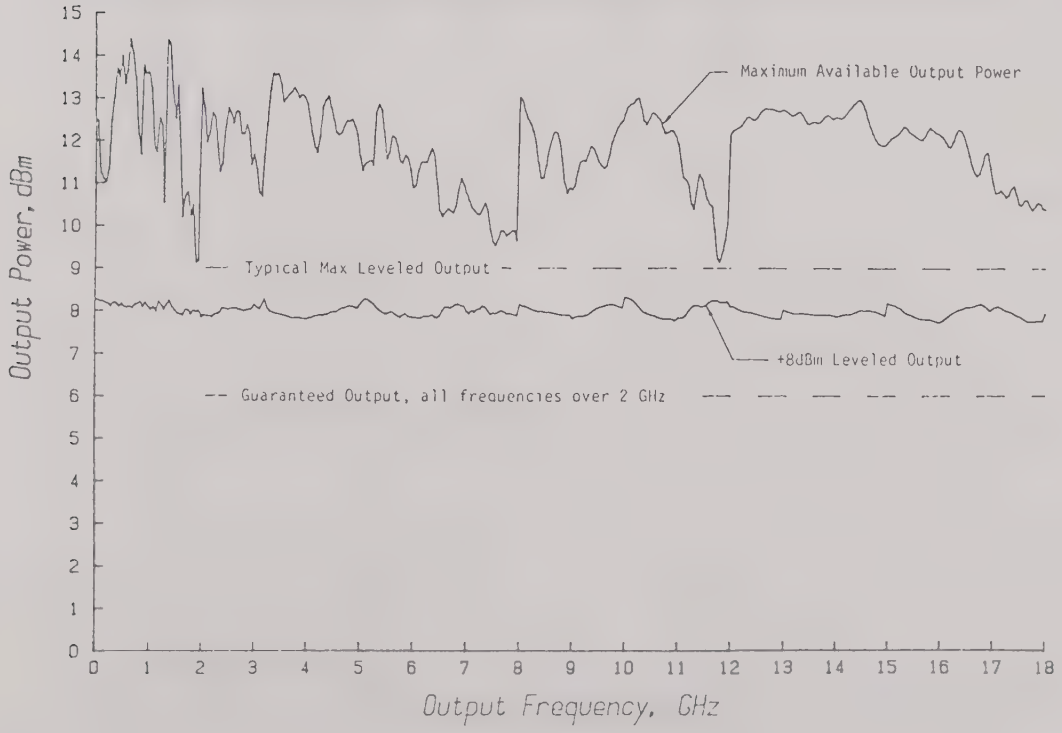

Option 09: External Power Measurement

OPERATING INFORMATION

When option 09 is installed, the instrument performs power level measurements. It provides three modes of operation: internal display of the signal generator RF Output, external power measurement and a difference measurement between the generator output and an external or return power level.

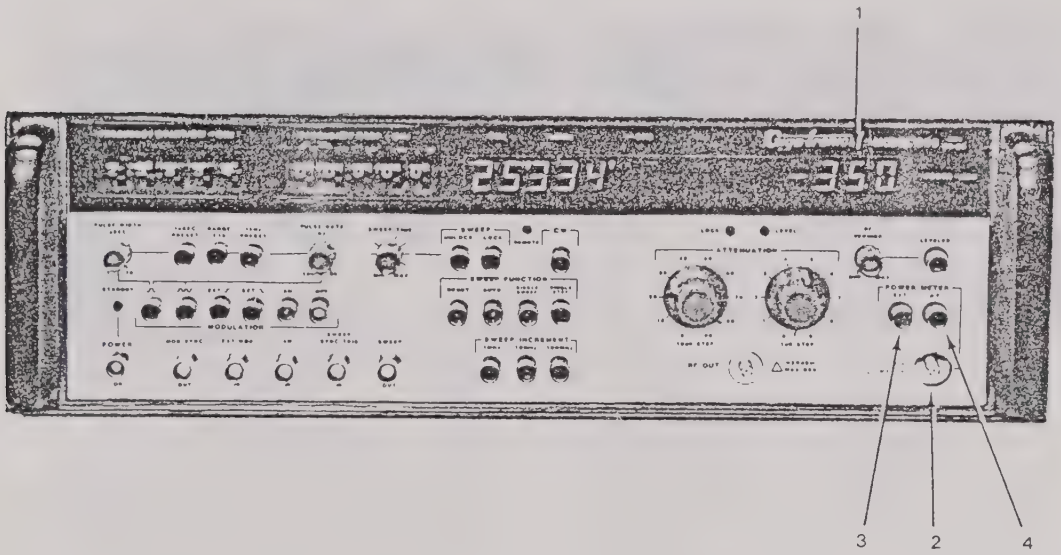

Figure 8.09.1

Steps

1. If both power meter pushbuttons (3 & 4) are released, the power meter readout will indicate the power level of the signal generator RF Output.

2. To measure external power levels, apply signal to the SMA connector.

3. Activate pushbutton marked EXT and power meter readout will operate as an external power meter.

4. To make a gain or loss measurement connect, the output of the signal generator to the device under test and connect its output to the external input. Activate the △P pushbutton and read power difference directly on the power meter readout.

Generator Output Cable Calibration

To achieve a leveled output at the end of a signal cable, the Series 900 with option 09 provides a means to automatically compensate for cable loss. Corrections are automatically made in 1 GHz segments to 26 GHz.

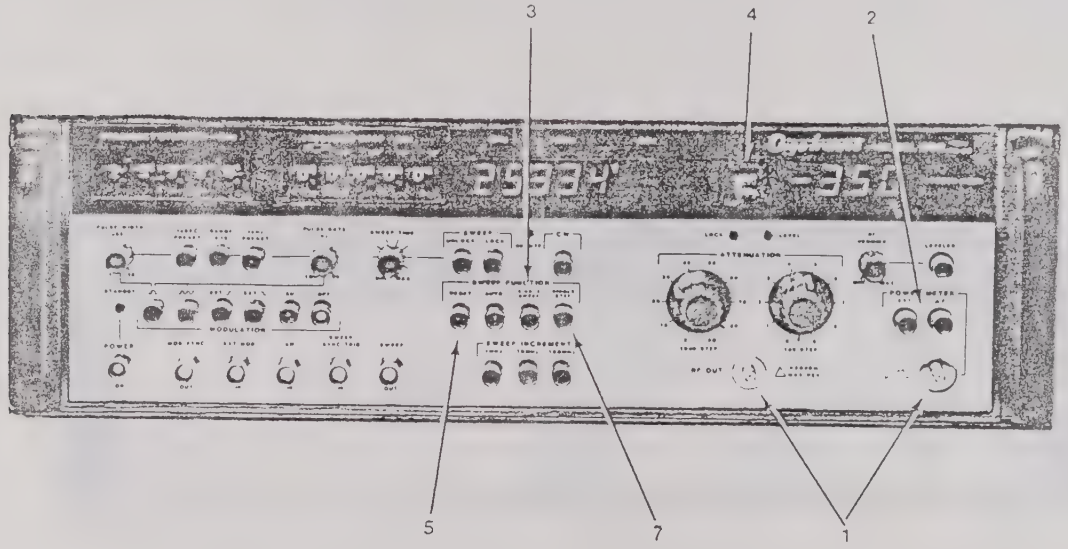

Figure 8.09.2

Steps

1. Connect cable from generator output to power meter input.

2. Activate both Ext and △P power meter buttons. Instrument will read "Cal=?".

3. Activate single sweep button. Instrument will sweep cable and read "Cal=Yes".

4. Set any generator mode. Instrument will compensate for cable loss and indicate a small "c" after the frequency reading.

5. To deactivate the compensation for cable loss, activate both Ext and △P power meter buttons and push sweep reset. Instrument will read "Cal=No".

6. To return to uncalibrated operation, release one or both of the Ext or △P buttons after activating sweep reset.

7. To reactivate compensation, depress both Ext and △P buttons, then push single step.

OPERATING PERFORMANCE

Power Meter

Frequency Range:	50 MHz to 26 GHz
Accuracy (25°C ± 10°C):	±1 dB internal ±1 dB external -10 dBm to +10 dBm ±2 dB external -10 dBm to -30 dBm
Output:	0.5 V/dBm, nominal
External Power Range:	-30 dBm to +10 dBm
Resolution:	0.1 dBm, 3½ digits

THEORY OF OPERATION

THE MICROWAVE POWER METER - Each Signal Generator contains a built-in power meter for monitoring the output of the generator. When option 09 is installed an external input is provided so that this power meter may also be used to measure the power output of external sources over a range of -30 dBm to +10 dBm from 50 MHz to 26 GHz. A third mode of operation enables it to read the difference in power between the output of the synthesizer and the output of a unit under test.

The power meter uses a diode sense element feeding a logarithmic amplifier to convert the square law diode output to a signal linear in dB. Since the diode input is permitted to reach +10 dBm, a correction factor must be supplied to compensate for the more linear output characteristic of the detector above approximately -10 dBm. This correction is performed automatically by the microprocessor control system. When it senses that the input has reached a sufficient level, it caluculates and adds in the appropriate correction. The microprocessor system automatically displays the power reading on a front panel readout.

8.0 Power Meter Calibration

8.1 Turn on UUT and allow a 20 minute warmup, covers on. Be certain that the CW calibration has been done. Set CW mode, no modulation.

8.2 Connect the power meter to the RF output. Enable the vernier and set it fully clockwise for maximum output. Find a frequency above and as close to 2 GHz as possible where the power meter will read in excess of +10 dBm. If none is found under 3 GHz then use +9 or +8 and subtract the 1 or 2 dB as needed. Turn the level vernier down until the level light is on with the power at +10 (or +9, etc.).

8.3 Connect a very short piece of low loss coaxial cable from the RF output to the power meter input. It is best to use .141 diameter semi-rigid.

8.4 With the 10 dB step attenuator at -20 dBm, switch the power meter switch to external and adjust "-10" (R45) on A19 for a reading of -10 dBm, ±.3 dB.

8.5 Set the 10 dB attenuator to 0 dBm and adjust "TRK" (R51) on A19 for a reading of +10 dBm, ±.3 dB.

8.6 Repeat 8.4 and 8.5 as needed.

8.7 Set the 10 dB attenuator to -10 dBm and adjust "-20" (R31) on A19 for a reading of 0 dBm, ±.3 dB.

8.8 Repeat 8.4 through 8.7 as required.

8.9 Set the 10 dB attenuator to -40 dBm and adjust "-30" (R29) on A19 for a reading of -30 dBm, ±1 dB.

8.10 Check the power meter accuracy at each 10 dB step from 0 to -40 and insure that the readout is within the required accuracy of ±2 dB, -11 to -30 dBm; ±1 dB, -10 to +10 dBm.

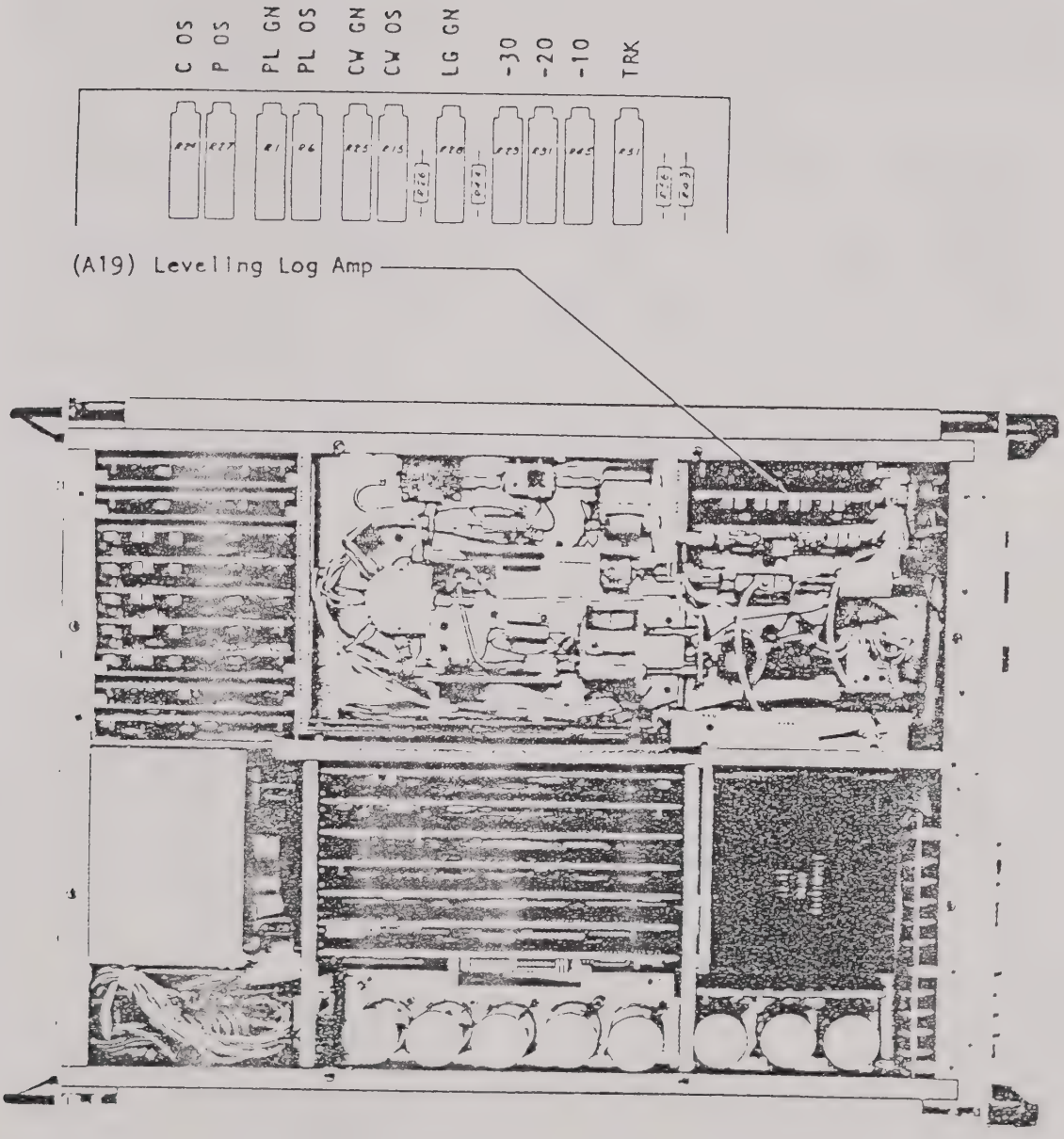
C OS
P OS
PL GN
PL OS
CW GN
CW OS
LG GN
-30
-20
-10
TRK
(A19) Leveling Log Amp

Figure 8.09.3

Option 10: +10 dBm Output Power

This option increases the maximum leveled output power of signal generators that normally provide +5 dBm output power. It is implemented by substituting specially designed high power YIG oscillators for the standard YIG oscillators normally supplied. These high powered oscillators are capable of increasing available output power by approximately 5 dBm.

Option 10 provides maximum leveled output power of +10 dBm (nominal) at all output frequencies above 2 GHz, over a temperature range of +15°C to +35°C. Typically, maximum leveled output power will be >+11 dBm throughout this frequency range. There may, however, be one or more frequencies at which available power is slightly less than the nominal value, due to the characteristics of the particular high powered YIG oscillator involved. Output power at these frequencies is always >+8 dBm. Plots of the maximum available output power and the leveled output from a typical 26 GHz instrument with Option 10 are shown below. A plot of maximum available output power is supplied with each instrument.

NOTE: The instrument's harmonic specification (<-55 dBc at 0 dBm, CW mode) may degrade at outputs >0 dBm when Option 10 is installed.

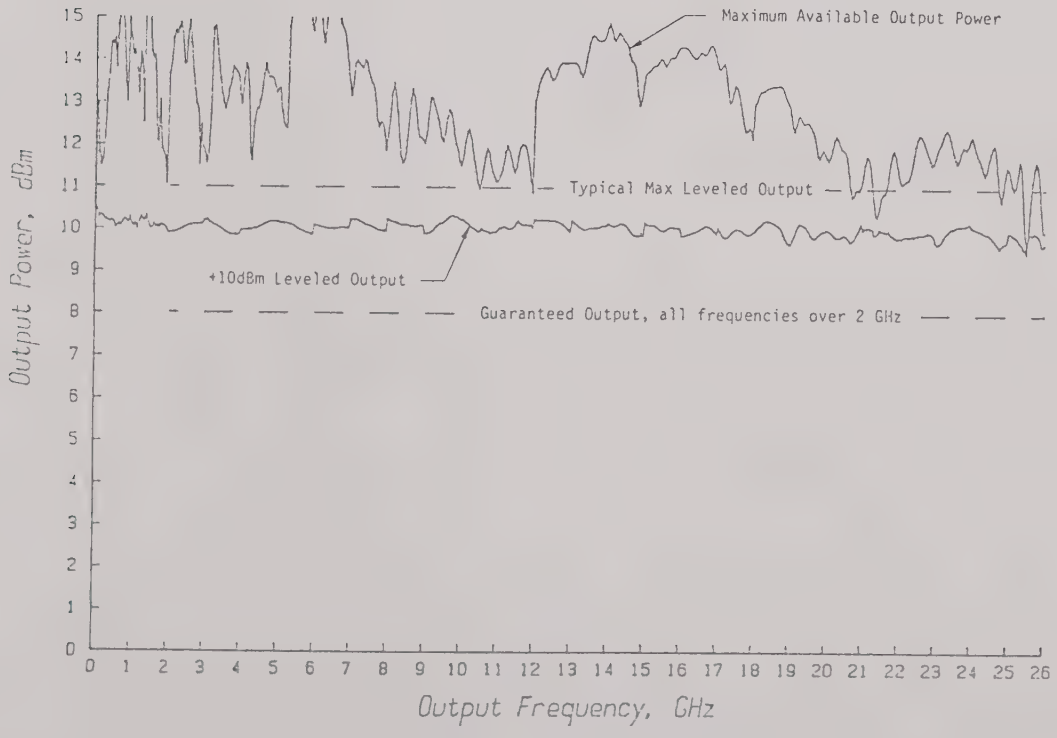

Option 15: External FM

Specifications

When Option 15 is installed, External Frequency Modulation capability is added to the instrument. Performance specifications are as follows:

DEVIATION: >20 MHz, p-p, at modulation rates from 10 Hz to 100 kHz
>10 MHz, p-p, at modulation rates from 100 kHz to 250 kHz

FREQUENCY RESPONSE: 10 Hz to 1 MHz, $\pm$ 3 dB

SENSITIVITY: 3V, peak, for maximum deviation

DISTORTION: <5% at 1 MHz peak deviation and 100 kHz rate

INCIDENTAL AM: <5%

INPUT IMPEDANCE: 50 ohms, nominal

MAXIMUM INPUT LEVEL: $\pm$ 12 volts or 1 watt peak, whichever is less

Operating Instructions

The operating instructions for External FM are as follows:

1. Set the desired center frequency, using the 'FREQUENCY START/CF/CW' leverwheel switches on the front panel.

2. Depress the front panel 'FM' pushbutton.

3. Apply modulation signal at the 'FM IN' connector on the front panel.

Modifications

MECHANICAL MODIFICATIONS

The 'EXT ⌐└__' pushbutton on the front panel is changed to the 'FM' pushbutton.

An 'FM IN' BNC-connector is added to the front panel.

REMOTE PROGRAMMING MODIFICATIONS

Add the following at the end of paragraph 3.2 in Section One:

'MODzFM': select External FM mode

3.2.1 Dual Mode Modulation -- Two simultaneous modulation modes may be selected. Frequency Modulation may be enabled along with either

scan modulation (if Option 07 is installed) or pulse/square wave modulation. To use the dual mode:

First, send the appropriate command from section 3.2; e.g., 'MODzSQUARE'.

Then send 'MODzFREQzON'.

THE ORDER OF COMMANDS IS IMPORTANT!

Note that the commands for modulation rate and width are also valid.

There is a corresponding command to turn off the FM, 'MODzFREQzOFF.'

The 'MODzFREQ---' command may be used by itself to control FM if 'MODzOFF' is sent.

SECTION NINE

SPECIAL CONFIGURATIONS

The instrument for which this manual is supplied includes no special modifications. Consult section 8 of this manual for information concerning any standard options which may be identified on the serial number tag affixed to the instrument's rear panel.

SECTION TEN

MANUAL CHANGES

MP MASTER
MA32033